Jersey City Master Plan
Circulation Element

Prepared for:

City of Jersey City
Hudson County, New Jersey

Prepared by:

T&M ASSOCIATES
Eleven Tindall Road
Middletown, New Jersey 07748

APPENDICES

Appendix

Traffic Count Data

TechniQuest Corporation

4105 US Route 1, Suite # 14
Monmouth Junction, NJ 08852
Phone: 732-274-9500 Fax: 732-274-9510

File Name : 41-A
Site Code : A
Start Date : 4/30/2008
Page No : 1

Groups Printed- Car - Light Truck - Heavy Truck

	Garfield Avenue Southbound					Bay View Avenue Westbound					Garfield Avenue Northbound					Bay View Avenue Eastbound					
Start Time	Left	Thru	Right	Peds	App. Total	Left	Thru	Right	Peds	App. Total	Left	Thru	Right	Peds	App. Total	Left	Thru	Right	Peds	App. Total	Int. Total
07:00 AM	31	67	0	0	98	8	0	37	0	45	0	94	3	0	97	19	27	14	0	60	300
07:15 AM	34	65	0	0	99	7	0	42	0	49	0	102	4	0	106	18	30	15	0	63	317
07:30 AM	31	77	0	0	108	13	0	51	0	64	10	123	25	0	158	28	32	13	0	73	403
07:45 AM	36	101	0	0	137	26	0	76	0	102	0	144	16	0	160	30	36	16	0	82	481
Total	132	310	0	0	442	54	0	206	0	260	10	463	48	0	521	95	125	58	0	278	1501
08:00 AM	37	85	0	0	122	17	0	60	0	77	0	127	9	0	136	33	37	22	0	92	427
08:15 AM	36	108	0	0	144	22	0	51	0	73	0	126	10	0	136	32	34	40	0	106	459
08:30 AM	23	98	0	0	121	17	0	57	0	74	0	132	20	0	152	17	19	19	0	55	402
08:45 AM	30	84	0	0	114	33	0	51	0	84	0	110	14	0	124	23	23	28	0	74	396
Total	126	375	0	0	501	89	0	219	0	308	0	495	53	0	548	105	113	109	0	327	1684
09:00 AM	32	81	0	0	113	26	0	42	0	68	0	33	4	0	37	21	21	14	0	56	274
09:15 AM	24	79	0	0	103	21	0	43	0	64	0	34	4	0	38	31	18	9	0	58	263
09:30 AM	31	84	0	0	115	11	0	27	0	38	0	33	2	0	35	35	11	19	0	65	253
09:45 AM	19	79	0	0	98	16	0	40	0	56	0	13	1	0	14	22	15	13	0	50	218
Total	106	323	0	0	429	74	0	152	0	226	0	113	11	0	124	109	65	55	0	229	1008
*** BREAK ***																					
11:00 AM	18	41	0	0	59	17	0	26	0	43	0	23	8	0	31	22	18	14	0	54	187
11:15 AM	24	45	0	0	69	20	0	31	0	51	0	27	4	0	31	22	13	18	0	53	204
11:30 AM	12	38	0	0	50	18	0	27	0	45	0	28	9	0	37	9	11	13	0	33	165
11:45 AM	24	62	0	0	86	18	0	40	0	58	0	21	2	0	23	18	29	20	0	67	234
Total	78	186	0	0	264	73	0	124	0	197	0	99	23	0	122	71	71	65	0	207	790
12:00 PM	28	96	0	0	124	24	0	47	1	72	0	42	7	0	49	25	18	15	0	58	303
12:15 PM	25	79	0	0	104	15	0	53	0	68	0	35	5	0	40	18	17	16	0	51	263
12:30 PM	29	101	0	0	130	22	0	39	0	61	0	24	7	0	31	28	19	18	0	65	287
12:45 PM	24	63	0	0	87	13	0	48	0	61	0	31	7	0	38	20	14	13	0	47	233
Total	106	339	0	0	445	74	0	187	1	262	0	132	26	0	158	91	68	62	0	221	1086
01:00 PM	12	53	0	0	65	22	0	43	0	65	0	33	4	0	37	20	13	12	0	45	212
01:15 PM	24	66	0	0	90	26	0	37	0	63	0	35	3	0	38	19	11	11	0	41	232
01:30 PM	21	71	0	0	92	25	0	36	0	61	0	27	9	0	36	18	20	13	0	51	240
01:45 PM	14	63	0	0	77	14	0	34	0	48	0	29	9	0	38	20	21	16	0	57	220
Total	71	253	0	0	324	87	0	150	0	237	0	124	25	0	149	77	65	52	0	194	904

TechniQuest Corporation

4105 US Route 1, Suite # 14
Monmouth Junction, NJ 08852
Phone: 732-274-9500 Fax: 732-274-9510

File Name : 41-A
Site Code : A
Start Date : 4/30/2008

Groups Printed- Car - Light Truck - Heavy Truck

	Garfield Avenue Southbound					Bay View Avenue Westbound					Garfield Avenue Northbound					Bay View Avenue Eastbound					
Start Time	Left	Thru	Right	Peds	App. Total	Left	Thru	Right	Peds	App. Total	Left	Thru	Right	Peds	App. Total	Left	Thru	Right	Peds	App. Total	Int. Total
*** BREAK ***																					
03:00 PM	43	27	0	0	70	24	0	21	0	45	0	34	7	0	41	26	35	27	0	88	244
03:15 PM	41	26	0	0	67	29	0	25	0	54	0	35	6	0	41	26	36	30	0	92	254
03:30 PM	43	143	0	0	186	31	0	26	0	57	0	36	2	0	38	29	35	29	0	93	374
03:45 PM	32	132	0	0	164	25	0	41	0	66	0	55	7	0	62	22	20	28	0	70	362
Total	159	328	0	0	487	109	0	113	0	222	0	160	22	0	182	103	126	114	0	343	1234
04:00 PM	31	122	0	0	153	45	0	39	0	84	0	83	13	0	96	8	16	30	0	54	387
04:15 PM	21	112	0	0	133	36	0	48	0	84	0	74	16	0	90	6	11	15	0	32	339
04:30 PM	23	100	0	0	123	32	0	37	0	69	0	81	12	0	93	9	10	13	0	32	317
04:45 PM	14	105	0	0	119	40	0	45	0	85	0	60	14	0	74	11	15	20	0	46	324
Total	89	439	0	0	528	153	0	169	0	322	0	298	55	0	353	34	52	78	0	164	1367
05:00 PM	21	121	0	0	142	43	0	28	0	71	0	77	7	0	84	17	19	21	0	57	354
05:15 PM	22	108	0	0	130	38	0	39	0	77	0	104	9	0	113	15	20	19	0	54	374
05:30 PM	15	107	0	0	122	39	0	32	0	71	0	94	17	0	111	13	18	24	0	55	359
05:45 PM	33	138	0	0	171	39	0	33	0	72	0	110	11	0	121	15	18	20	0	53	417
Total	91	474	0	0	565	159	0	132	0	291	0	385	44	0	429	60	75	84	0	219	1504
Grand Total	958	3027	0	0	3985	872	0	1452	1	2325	10	2269	307	0	2586	745	760	677	0	2182	11078
Apprch %	24	76	0	0		37.5	0	62.5	0		0.4	87.7	11.9	0		34.1	34.8	31	0		
Total %	8.6	27.3	0	0	36	7.9	0	13.1	0	21	0.1	20.5	2.8	0	23.3	6.7	6.9	6.1	0	19.7	
Car	764	2911	0	0	3675	802	0	1210	0	2012	10	2214	297	0	2521	730	727	664	0	2121	10329
% Car	79.7	96.2	0	0	92.2	92	0	83.3	0	86.5	100	97.6	96.7	0	97.5	98	95.7	98.1	0	97.2	93.2
Light Truck	43	97	0	0	140	65	0	83	0	148	0	52	7	0	59	13	24	12	0	49	396
% Light Truck	4.5	3.2	0	0	3.5	7.5	0	5.7	0	6.4	0	2.3	2.3	0	2.3	1.7	3.2	1.8	0	2.2	3.6
Heavy Truck	151	19	0	0	170	5	0	159	1	165	0	3	3	0	6	2	9	1	0	12	353
% Heavy Truck	15.8	0.6	0	0	4.3	0.6	0	11	100	7.1	0	0.1	1	0	0.2	0.3	1.2	0.1	0	0.5	3.2

TechniQuest Corporation

4105 US Route 1, Suite # 14
Monmouth Junction, NJ 08852
Phone: 732-274-9500 Fax: 732-274-9510

File Name : 41-A
Site Code : A
Start Date : 4/30/2008
Page No : 3

	Garfield Avenue Southbound					Bay View Avenue Westbound					Garfield Avenue Northbound					Bay View Avenue Eastbound					
Start Time	Left	Thru	Right	Peds	App. Total	Left	Thru	Right	Peds	App. Total	Left	Thru	Right	Peds	App. Total	Left	Thru	Right	Peds	App. Total	Int. Total
Peak Hour Analysis From 07:45 AM to 08:30 AM - Peak 1 of 1																					
Peak Hour for Entire Intersection Begins at 07:45 AM																					
07:45 AM	36	101	0	0	137	26	0	76	0	102	0	144	16	0	160	30	36	16	0	82	481
08:00 AM	37	85	0	0	122	17	0	60	0	77	0	127	9	0	136	33	37	22	0	92	427
08:15 AM	36	108	0	0	144	22	0	51	0	73	0	126	10	0	136	32	34	40	0	106	459
08:30 AM	23	98	0	0	121	17	0	57	0	74	0	132	20	0	152	17	19	19	0	55	402
Total Volume	132	392	0	0	524	82	0	244	0	326	0	529	55	0	584	112	126	97	0	335	1769
% App. Total	25.2	74.8	0	0		25.2	0	74.8	0		0	90.6	9.4	0		33.4	37.6	29	0		
PHF	.892	.907	.000	.000	.910	.788	.000	.803	.000	.799	.000	.918	.688	.000	.913	.848	.851	.606	.000	.790	.919

TechniQuest Corporation

4105 US Route 1, Suite # 14
Monmouth Junction, NJ 08852
Phone: 732-274-9500 Fax: 732-274-9510

File Name : 41-A
Site Code : A
Start Date : 4/30/2008
Page No : 4

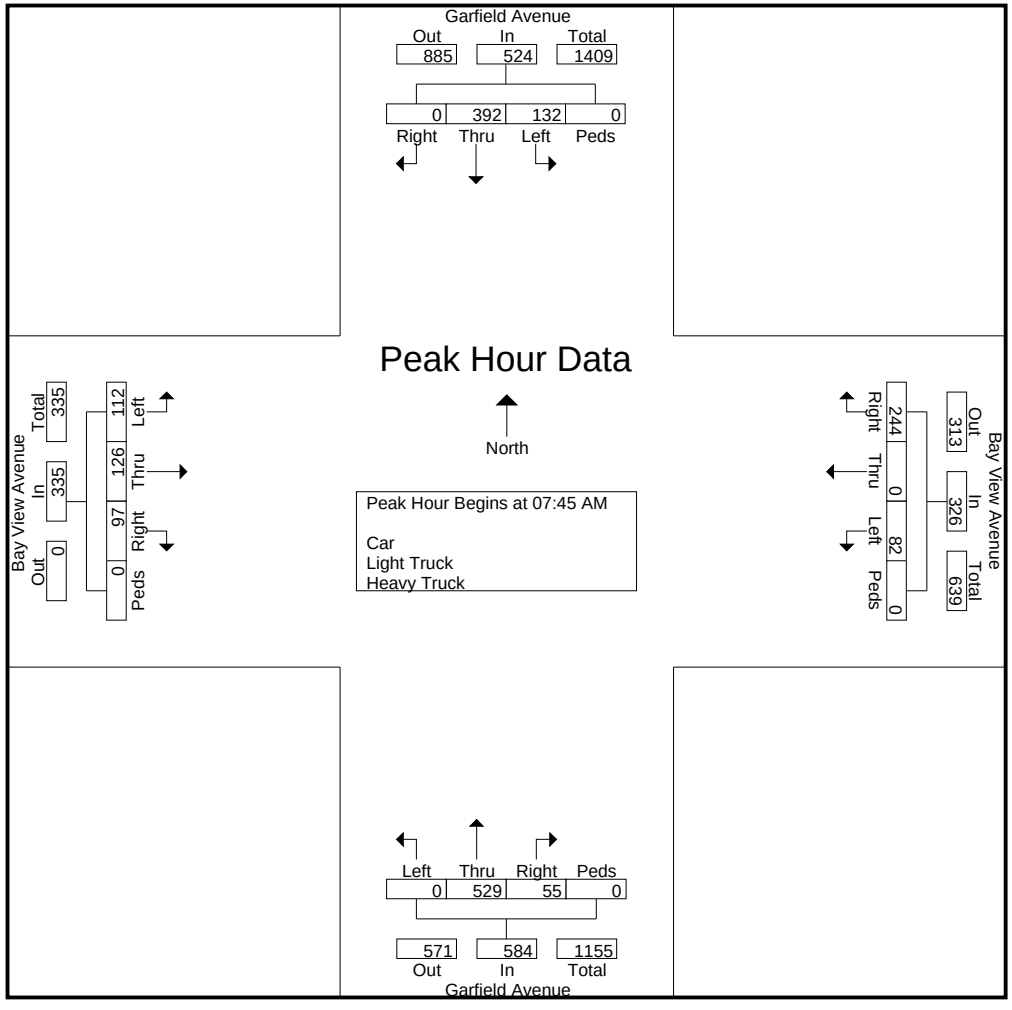

TechniQuest Corporation

4105 US Route 1, Suite # 14
Monmouth Junction, NJ 08852
Phone: 732-274-9500 Fax: 732-274-9510

File Name : 41-A
Site Code : A
Start Date : 4/30/2008
Page No : 5

	Garfield Avenue Southbound					Bay View Avenue Westbound					Garfield Avenue Northbound					Bay View Avenue Eastbound					
Start Time	Left	Thru	Right	Peds	App. Total	Left	Thru	Right	Peds	App. Total	Left	Thru	Right	Peds	App. Total	Left	Thru	Right	Peds	App. Total	Int. Total
Peak Hour Analysis From 05:00 PM to 05:45 PM - Peak 1 of 1																					
Peak Hour for Entire Intersection Begins at 05:00 PM																					
05:00 PM	21	121	0	0	142	43	0	28	0	71	0	77	7	0	84	17	19	21	0	57	354
05:15 PM	22	108	0	0	130	38	0	39	0	77	0	104	9	0	113	15	20	19	0	54	374
05:30 PM	15	107	0	0	122	39	0	32	0	71	0	94	17	0	111	13	18	24	0	55	359
05:45 PM	33	138	0	0	171	39	0	33	0	72	0	110	11	0	121	15	18	20	0	53	417
Total Volume	91	474	0	0	565	159	0	132	0	291	0	385	44	0	429	60	75	84	0	219	1504
% App. Total	16.1	83.9	0	0		54.6	0	45.4	0		0	89.7	10.3	0		27.4	34.2	38.4	0		
PHF	.689	.859	.000	.000	.826	.924	.000	.846	.000	.945	.000	.875	.647	.000	.886	.882	.938	.875	.000	.961	.902

TechniQuest Corporation

4105 US Route 1, Suite # 14
Monmouth Junction, NJ 08852
Phone: 732-274-9500 Fax: 732-274-9510

File Name : 41-A
Site Code : A
Start Date : 4/30/2008
Page No : 6

Peak Hour Data

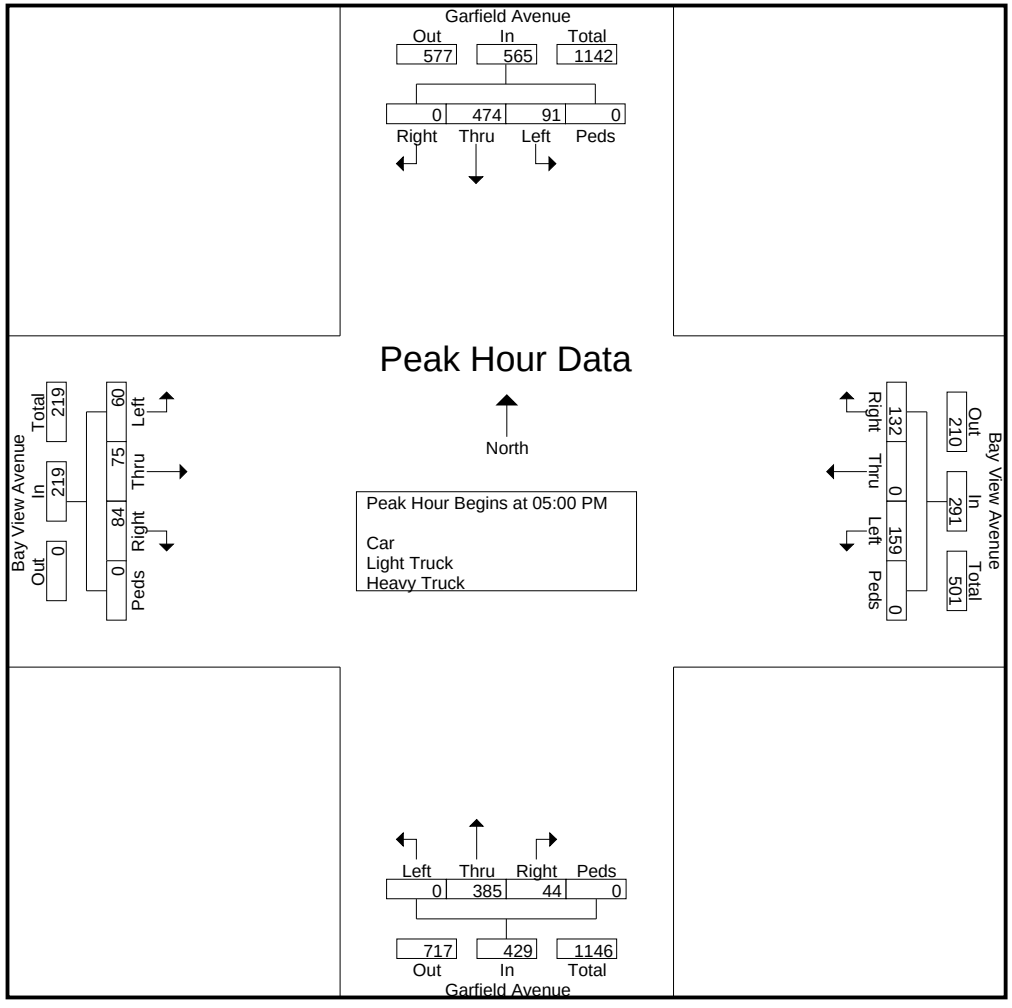

TechniQuest Corporation

4105 US Route 1, Suite # 14
Monmouth Junction, NJ 08852
Phone: 732-274-9500 Fax: 732-274-9510

File Name : 41-B
Site Code : B
Start Date : 5/1/2008
Page No : 1

Groups Printed- Car - Light Truck - Heavy Truck

	Summit Avenue Southbound					Communipaw Avenue Westbound					Garfield Avenue Northbound					Communipaw Avenue Eastbound					
Start Time	Left	Thru	Right to Communipaw Ave	LT to Garfield Ave	App. Total	Left	Thru	Right	Peds	App. Total	Left	Thru	Right	Peds	App. Total	Left	Thru	Right	Peds	App. Total	Int. Total
07:00 AM	1	9	48	2	60	5	23	15	0	43	10	115	5	0	130	16	45	16	0	77	310
07:15 AM	0	6	60	0	66	3	23	16	0	42	9	106	4	0	119	20	31	17	0	68	295
07:30 AM	0	2	66	0	68	7	22	11	0	40	9	73	3	0	85	34	41	21	0	96	289
07:45 AM	2	11	73	0	86	7	27	10	0	44	8	91	7	0	106	66	61	21	0	148	384
Total	3	28	247	2	280	22	95	52	0	169	36	385	19	0	440	136	178	75	0	389	1278
08:00 AM	2	5	77	0	84	7	31	15	0	53	11	82	6	0	99	88	53	23	0	164	400
08:15 AM	0	11	99	0	110	14	26	11	0	51	5	67	6	0	78	55	64	19	0	138	377
08:30 AM	0	7	92	2	101	24	25	15	0	64	6	77	5	0	88	42	65	26	0	133	386
08:45 AM	0	16	78	1	95	10	15	12	0	37	6	32	2	0	40	28	55	28	0	111	283
Total	2	39	346	3	390	55	97	53	0	205	28	258	19	0	305	213	237	96	0	546	1446
09:00 AM	1	12	69	2	84	5	17	5	0	27	3	29	5	0	37	20	55	27	0	102	250
09:15 AM	0	9	70	0	79	12	32	9	0	53	10	56	11	0	77	14	32	16	0	62	271
09:30 AM	2	13	54	2	71	15	32	11	0	58	11	61	7	0	79	6	34	23	0	63	271
09:45 AM	0	5	77	2	84	9	28	10	0	47	11	59	8	0	78	10	31	25	0	66	275
Total	3	39	270	6	318	41	109	35	0	185	35	205	31	0	271	50	152	91	0	293	1067
*** BREAK ***																					
11:00 AM	0	9	57	0	66	12	23	8	0	43	17	59	7	0	83	13	32	12	0	57	249
11:15 AM	0	7	81	4	92	9	27	6	0	42	5	37	7	0	49	13	33	23	0	69	252
11:30 AM	2	15	65	3	85	2	19	7	0	28	14	29	3	0	46	13	44	25	0	82	241
11:45 AM	0	8	76	1	85	1	14	4	2	21	11	23	1	0	35	22	54	23	0	99	240
Total	2	39	279	8	328	24	83	25	2	134	47	148	18	0	213	61	163	83	0	307	982
12:00 PM	1	6	76	1	84	18	31	11	0	60	17	34	8	0	59	13	33	15	0	61	264
12:15 PM	0	13	77	1	91	5	20	5	0	30	5	20	5	0	30	17	41	22	0	80	231
12:30 PM	0	10	71	2	83	11	29	14	0	54	16	74	9	0	99	25	30	22	0	77	313
12:45 PM	1	13	75	1	90	12	37	19	0	68	6	51	10	0	67	12	30	28	0	70	295
Total	2	42	299	5	348	46	117	49	0	212	44	179	32	0	255	67	134	87	0	288	1103
01:00 PM	0	4	54	5	63	10	25	4	0	39	10	69	5	0	84	17	31	14	0	62	248
01:15 PM	1	15	68	3	87	6	7	3	0	16	3	33	2	0	38	20	38	31	0	89	230
01:30 PM	1	11	87	2	101	6	4	3	0	13	7	27	2	1	37	15	39	34	0	88	239
01:45 PM	1	10	71	1	83	9	13	11	0	33	3	27	13	0	43	14	31	27	0	72	231
Total	3	40	280	11	334	31	49	21	0	101	23	156	22	1	202	66	139	106	0	311	948

TechniQuest Corporation

4105 US Route 1, Suite # 14
Monmouth Junction, NJ 08852
Phone: 732-274-9500 Fax: 732-274-9510

File Name : 41-B
Site Code : B
Start Date : 5/1/2008
Page No : 2

Groups Printed- Car - Light Truck - Heavy Truck

	Summit Avenue Southbound					Communipaw Avenue Westbound					Garfield Avenue Northbound					Communipaw Avenue Eastbound					
Start Time	Left	Thru	Right to Communipaw Ave	LT to Garfield Ave	App. Total	Left	Thru	Right	Peds	App. Total	Left	Thru	Right	Peds	App. Total	Left	Thru	Right	Peds	App. Total	Int. Total
*** BREAK ***																					
03:00 PM	0	5	96	1	102	11	32	13	0	56	10	40	5	0	55	18	35	24	0	77	290
03:15 PM	0	4	100	0	104	16	32	12	0	60	11	43	4	0	58	18	36	26	0	80	302
03:30 PM	0	8	118	0	126	20	38	17	0	75	15	79	10	0	104	25	46	23	0	94	399
03:45 PM	0	5	105	1	111	21	25	18	0	64	19	76	10	0	105	15	56	36	0	107	387
Total	0	22	419	2	443	68	127	60	0	255	55	238	29	0	322	76	173	109	0	358	1378
04:00 PM	0	7	98	0	105	23	49	20	0	92	19	75	9	0	103	20	43	27	0	90	390
04:15 PM	0	7	121	0	128	22	36	16	0	74	14	80	11	0	105	18	46	24	0	88	395
04:30 PM	1	14	113	0	128	24	28	9	0	61	9	78	9	0	96	18	48	31	0	97	382
04:45 PM	0	11	113	0	124	15	40	8	0	63	20	49	6	0	75	22	47	17	0	86	348
Total	1	39	445	0	485	84	153	53	0	290	62	282	35	0	379	78	184	99	0	361	1515
05:00 PM	0	3	117	1	121	30	60	19	0	109	16	80	9	0	105	26	68	19	0	113	448
05:15 PM	0	4	124	2	130	24	27	7	0	58	9	56	6	0	71	27	49	23	0	99	358
05:30 PM	1	11	123	1	136	16	35	15	1	67	10	51	4	0	65	19	51	29	0	99	367
05:45 PM	0	8	112	0	120	13	26	7	0	46	13	81	10	0	104	15	55	24	0	94	364
Total	1	26	476	4	507	83	148	48	1	280	48	268	29	0	345	87	223	95	0	405	1537
Grand Total	17	314	3061	41	3433	454	978	396	3	1831	378	2119	234	1	2732	834	1583	841	0	3258	11254
Apprch %	0.5	9.1	89.2	1.2		24.8	53.4	21.6	0.2		13.8	77.6	8.6	0		25.6	48.6	25.8	0		
Total %	0.2	2.8	27.2	0.4	30.5	4	8.7	3.5	0	16.3	3.4	18.8	2.1	0	24.3	7.4	14.1	7.5	0	28.9	
Car	17	294	2900	37	3248	433	869	367	3	1672	329	2009	224	1	2563	803	1427	747	0	2977	10460
% Car	100	93.6	94.7	90.2	94.6	95.4	88.9	92.7	100	91.3	87	94.8	95.7	100	93.8	96.3	90.1	88.8	0	91.4	92.9
Light Truck	0	16	146	3	165	10	63	15	0	88	11	85	6	0	102	28	135	45	0	208	563
% Light Truck	0	5.1	4.8	7.3	4.8	2.2	6.4	3.8	0	4.8	2.9	4	2.6	0	3.7	3.4	8.5	5.4	0	6.4	5
Heavy Truck	0	4	15	1	20	11	46	14	0	71	38	25	4	0	67	3	21	49	0	73	231
% Heavy Truck	0	1.3	0.5	2.4	0.6	2.4	4.7	3.5	0	3.9	10.1	1.2	1.7	0	2.5	0.4	1.3	5.8	0	2.2	2.1

TechniQuest Corporation

4105 US Route 1, Suite # 14
Monmouth Junction, NJ 08852
Phone: 732-274-9500 Fax: 732-274-9510

File Name : 41-B
Site Code : B
Start Date : 5/1/2008
Page No : 3

	Summit Avenue Southbound					Communipaw Avenue Westbound					Garfield Avenue Northbound					Communipaw Avenue Eastbound					
Start Time	Left	Thru	Right to Communipaw Ave	LT to Garfield Ave	App. Total	Left	Thru	Right	Peds	App. Total	Left	Thru	Right	Peds	App. Total	Left	Thru	Right	Peds	App. Total	Int. Total
Peak Hour Analysis From 07:45 AM to 08:30 AM - Peak 1 of 1																					
Peak Hour for Entire Intersection Begins at 07:45 AM																					
07:45 AM	2	11	73	0	86	7	27	10	0	44	8	91	7	0	106	66	61	21	0	148	384
08:00 AM	2	5	77	0	84	7	31	15	0	53	11	82	6	0	99	88	53	23	0	164	400
08:15 AM	0	11	99	0	110	14	26	11	0	51	5	67	6	0	78	55	64	19	0	138	377
08:30 AM	0	7	92	2	101	24	25	15	0	64	6	77	5	0	88	42	65	26	0	133	386
Total Volume	4	34	341	2	381	52	109	51	0	212	30	317	24	0	371	251	243	89	0	583	1547
% App. Total	1	8.9	89.5	0.5		24.5	51.4	24.1	0		8.1	85.4	6.5	0		43.1	41.7	15.3	0		
PHF	.500	.773	.861	.250	.866	.542	.879	.850	.000	.828	.682	.871	.857	.000	.875	.713	.935	.856	.000	.889	.967

TechniQuest Corporation

4105 US Route 1, Suite # 14
Monmouth Junction, NJ 08852
Phone: 732-274-9500 Fax: 732-274-9510

File Name : 41-B
Site Code : B
Start Date : 5/1/2008
Page No : 4

Peak Hour Data

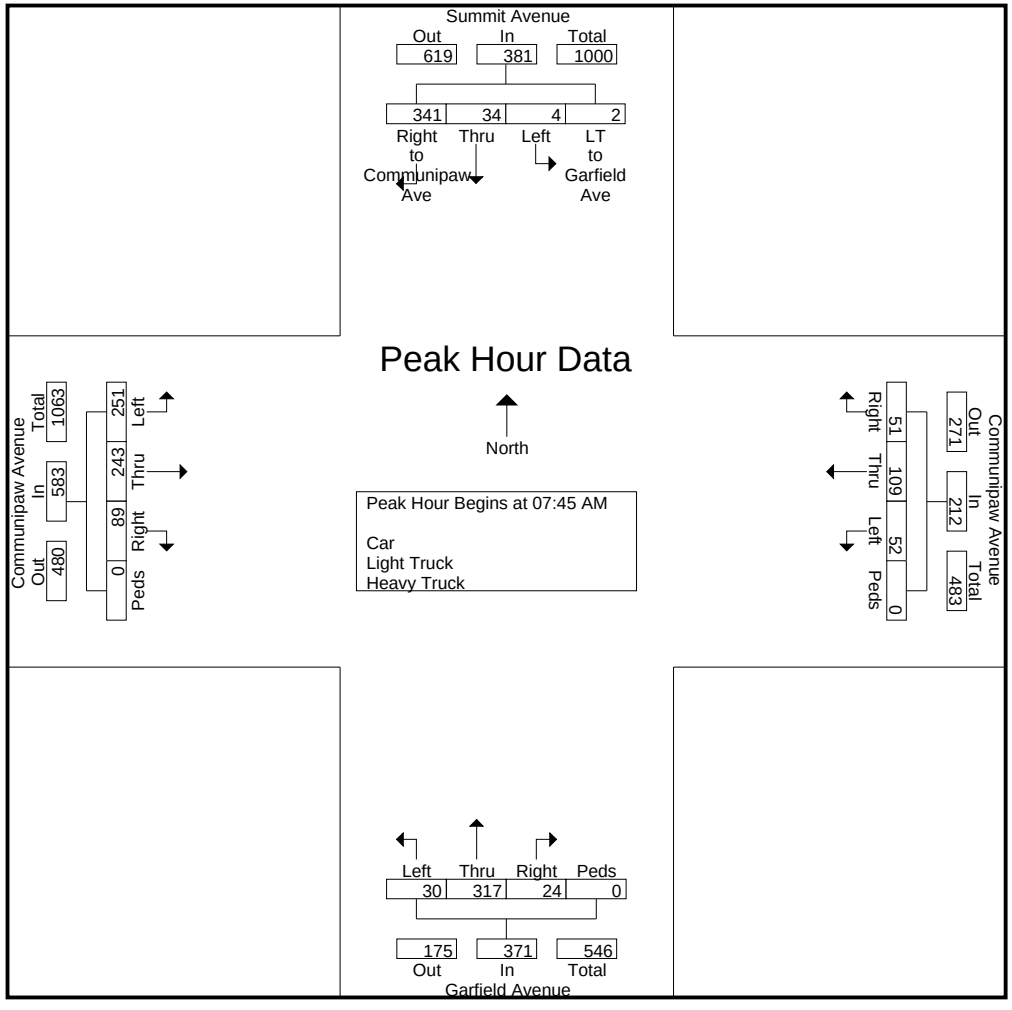

TechniQuest Corporation

4105 US Route 1, Suite # 14
Monmouth Junction, NJ 08852
Phone: 732-274-9500 Fax: 732-274-9510

File Name : 41-B
Site Code : B
Start Date : 5/1/2008
Page No : 5

	Summit Avenue Southbound					Communipaw Avenue Westbound					Garfield Avenue Northbound					Communipaw Avenue Eastbound					
Start Time	Left	Thru	Right to Communipaw Ave	LT to Garfield Ave	App. Total	Left	Thru	Right	Peds	App. Total	Left	Thru	Right	Peds	App. Total	Left	Thru	Right	Peds	App. Total	Int. Total
Peak Hour Analysis From 05:00 PM to 05:45 PM - Peak 1 of 1																					
Peak Hour for Entire Intersection Begins at 05:00 PM																					
05:00 PM	0	3	117	1	121	30	60	19	0	109	16	80	9	0	105	26	68	19	0	113	448
05:15 PM	0	4	124	2	130	24	27	7	0	58	9	56	6	0	71	27	49	23	0	99	358
05:30 PM	1	11	123	1	136	16	35	15	1	67	10	51	4	0	65	19	51	29	0	99	367
05:45 PM	0	8	112	0	120	13	26	7	0	46	13	81	10	0	104	15	55	24	0	94	364
Total Volume	1	26	476	4	507	83	148	48	1	280	48	268	29	0	345	87	223	95	0	405	1537
% App. Total	0.2	5.1	93.9	0.8		29.6	52.9	17.1	0.4		13.9	77.7	8.4	0		21.5	55.1	23.5	0		
PHF	.250	.591	.960	.500	.932	.692	.617	.632	.250	.642	.750	.827	.725	.000	.821	.806	.820	.819	.000	.896	.858

TechniQuest Corporation

4105 US Route 1, Suite # 14
Monmouth Junction, NJ 08852
Phone: 732-274-9500 Fax: 732-274-9510

File Name : 41-B
Site Code : B
Start Date : 5/1/2008
Page No : 6

Peak Hour Data

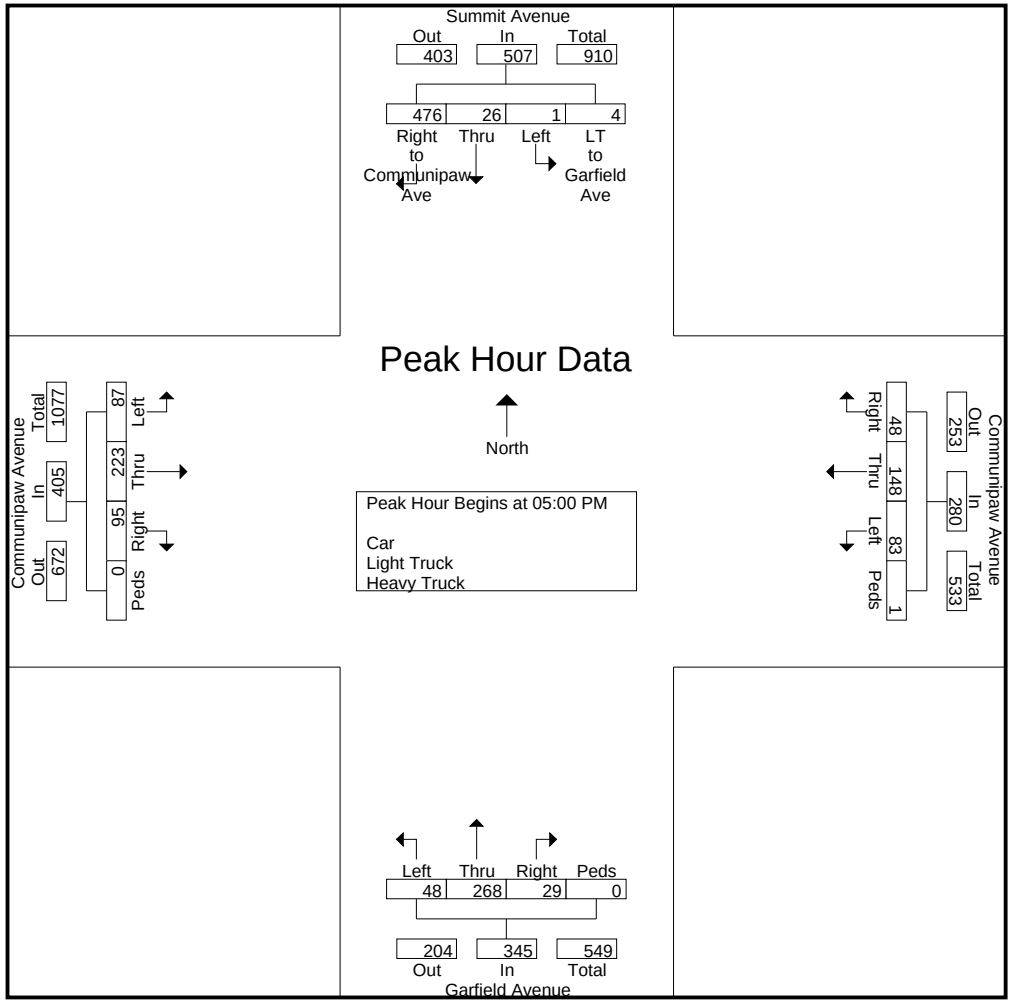

TechniQuest Corporation

4105 US Route 1, Suite # 14
Monmouth Junction, NJ 08852
Phone: 732-274-9500 Fax: 732-274-9510

File Name : 41-C
Site Code : C
Start Date : 4/30/2008
Page No : 1

Groups Printed- Car - Light Truck - Heavy Truck

	Pacific Avenue Southbound					Communipaw Avenue Westbound					Pacific Avenue Northbound					Communipaw Avenue Eastbound					
Start Time	Left	Thru	Right	Peds	App. Total	Left	Thru	Right	Peds	App. Total	Left	Thru	Right	Peds	App. Total	Left	Thru	Right	Peds	App. Total	Int. Total
07:00 AM	3	24	9	0	36	1	16	7	0	24	7	58	7	0	72	11	19	2	0	32	164
07:15 AM	3	22	8	0	33	2	13	8	0	23	5	61	9	0	75	12	22	1	0	35	166
07:30 AM	4	21	12	0	37	5	21	10	0	36	5	74	4	0	83	16	23	2	0	41	197
07:45 AM	6	36	10	0	52	5	20	10	0	35	7	97	4	0	108	23	22	3	0	48	243
Total	16	103	39	0	158	13	70	35	0	118	24	290	24	0	338	62	86	8	0	156	770
08:00 AM	3	49	14	0	66	4	21	16	0	41	4	102	6	0	112	23	27	6	0	56	275
08:15 AM	7	35	9	0	51	8	10	8	0	26	9	73	15	0	97	27	25	2	0	54	228
08:30 AM	13	57	15	0	85	5	20	6	0	31	7	75	10	0	92	32	26	1	0	59	267
08:45 AM	8	28	22	0	58	2	25	5	0	32	5	53	8	0	66	24	23	2	0	49	205
Total	31	169	60	0	260	19	76	35	0	130	25	303	39	0	367	106	101	11	0	218	975
09:00 AM	4	29	10	0	43	2	17	11	0	30	9	39	9	0	57	8	24	6	0	38	168
09:15 AM	2	23	9	0	34	5	19	3	0	27	5	42	7	0	54	22	21	6	0	49	164
09:30 AM	3	23	8	0	34	2	16	7	0	25	7	40	3	0	50	10	23	9	0	42	151
09:45 AM	3	16	12	0	31	2	6	8	0	16	7	48	4	0	59	14	15	4	0	33	139
Total	12	91	39	0	142	11	58	29	0	98	28	169	23	0	220	54	83	25	0	162	622
*** BREAK ***																					
11:00 AM	5	25	13	0	43	0	13	5	0	18	6	24	1	0	31	18	14	6	0	38	130
11:15 AM	6	21	12	0	39	3	15	4	0	22	8	23	2	0	33	13	17	11	0	41	135
11:30 AM	1	43	10	0	54	7	14	3	0	24	8	20	7	0	35	14	20	6	0	40	153
11:45 AM	6	34	23	0	63	4	17	1	0	22	3	26	4	0	33	21	27	4	0	52	170
Total	18	123	58	0	199	14	59	13	0	86	25	93	14	0	132	66	78	27	0	171	588
12:00 PM	3	16	18	0	37	5	17	3	0	25	8	37	9	0	54	23	13	3	0	39	155
12:15 PM	4	29	13	0	46	3	11	7	0	21	8	20	6	0	34	19	18	2	0	39	140
12:30 PM	5	30	22	0	57	5	18	6	0	29	5	23	3	0	31	13	16	3	0	32	149
12:45 PM	7	28	16	0	51	2	12	3	0	17	5	41	5	0	51	24	21	5	0	50	169
Total	19	103	69	0	191	15	58	19	0	92	26	121	23	0	170	79	68	13	0	160	613
01:00 PM	8	33	15	0	56	5	18	6	0	29	2	45	5	0	52	24	20	2	0	46	183
01:15 PM	5	27	12	0	44	5	15	5	0	25	7	30	8	0	45	13	10	6	0	29	143
01:30 PM	6	28	6	0	40	6	9	7	0	22	6	27	2	0	35	16	18	5	0	39	136
01:45 PM	5	39	12	0	56	8	10	2	0	20	5	37	4	0	46	26	19	3	0	48	170
Total	24	127	45	0	196	24	52	20	0	96	20	139	19	0	178	79	67	16	0	162	632

TechniQuest Corporation

4105 US Route 1, Suite # 14
Monmouth Junction, NJ 08852
Phone: 732-274-9500 Fax: 732-274-9510

File Name : 41-C
Site Code : C
Start Date : 4/30/2008
Page No : 2

Groups Printed- Car - Light Truck - Heavy Truck

	Pacific Avenue Southbound					Communipaw Avenue Westbound					Pacific Avenue Northbound					Communipaw Avenue Eastbound					
Start Time	Left	Thru	Right	Peds	App. Total	Left	Thru	Right	Peds	App. Total	Left	Thru	Right	Peds	App. Total	Left	Thru	Right	Peds	App. Total	Int. Total
*** BREAK ***																					
03:00 PM	6	67	26	0	99	5	22	9	0	36	5	44	9	0	58	25	26	3	0	54	247
03:15 PM	12	72	15	0	99	4	12	3	0	19	10	51	3	0	64	13	12	6	0	31	213
03:30 PM	9	59	24	0	92	7	17	5	0	29	9	44	8	0	61	20	19	8	0	47	229
03:45 PM	9	50	15	0	74	4	21	4	0	29	4	44	6	0	54	20	20	3	0	43	200
Total	36	248	80	0	364	20	72	21	0	113	28	183	26	0	237	78	77	20	0	175	889
04:00 PM	6	45	15	0	66	4	31	11	0	46	9	35	4	0	48	13	18	1	0	32	192
04:15 PM	7	51	20	0	78	1	29	7	0	37	7	42	8	0	57	17	18	3	0	38	210
04:30 PM	7	54	20	0	81	5	22	12	0	39	6	40	6	0	52	19	18	2	0	39	211
04:45 PM	9	47	18	0	74	8	25	4	0	37	12	39	3	0	54	25	21	4	0	50	215
Total	29	197	73	0	299	18	107	34	0	159	34	156	21	0	211	74	75	10	0	159	828
05:00 PM	5	45	21	0	71	10	29	4	0	43	19	53	3	0	75	21	16	5	0	42	231
05:15 PM	5	61	24	0	90	3	32	8	0	43	5	41	4	0	50	25	24	7	0	56	239
05:30 PM	14	43	28	0	85	6	31	11	0	48	16	48	2	0	66	16	30	4	0	50	249
05:45 PM	12	47	18	0	77	10	31	9	0	50	12	46	3	0	61	18	27	8	0	53	241
Total	36	196	91	0	323	29	123	32	0	184	52	188	12	0	252	80	97	24	0	201	960
Grand Total	221	1357	554	0	2132	163	675	238	0	1076	262	1642	201	0	2105	678	732	154	0	1564	6877
Apprch %	10.4	63.6	26	0		15.1	62.7	22.1	0		12.4	78	9.5	0		43.4	46.8	9.8	0		
Total %	3.2	19.7	8.1	0	31	2.4	9.8	3.5	0	15.6	3.8	23.9	2.9	0	30.6	9.9	10.6	2.2	0	22.7	
Car	207	1328	502	0	2037	160	646	220	0	1026	241	1596	196	0	2033	614	696	138	0	1448	6544
% Car	93.7	97.9	90.6	0	95.5	98.2	95.7	92.4	0	95.4	92	97.2	97.5	0	96.6	90.6	95.1	89.6	0	92.6	95.2
Light Truck	13	19	44	0	76	1	17	14	0	32	6	30	4	0	40	61	23	8	0	92	240
% Light Truck	5.9	1.4	7.9	0	3.6	0.6	2.5	5.9	0	3	2.3	1.8	2	0	1.9	9	3.1	5.2	0	5.9	3.5
Heavy Truck	1	10	8	0	19	2	12	4	0	18	15	16	1	0	32	3	13	8	0	24	93
% Heavy Truck	0.5	0.7	1.4	0	0.9	1.2	1.8	1.7	0	1.7	5.7	1	0.5	0	1.5	0.4	1.8	5.2	0	1.5	1.4

TechniQuest Corporation

4105 US Route 1, Suite # 14
Monmouth Junction, NJ 08852
Phone: 732-274-9500 Fax: 732-274-9510

File Name : 41-C
Site Code : C
Start Date : 4/30/2008
Page No : 3

	Pacific Avenue Southbound					Communipaw Avenue Westbound					Pacific Avenue Northbound					Communipaw Avenue Eastbound					
Start Time	Left	Thru	Right	Peds	App. Total	Left	Thru	Right	Peds	App. Total	Left	Thru	Right	Peds	App. Total	Left	Thru	Right	Peds	App. Total	Int. Total
Peak Hour Analysis From 07:45 AM to 08:30 AM - Peak 1 of 1																					
Peak Hour for Entire Intersection Begins at 07:45 AM																					
07:45 AM	6	36	10	0	52	5	20	10	0	35	7	97	4	0	108	23	22	3	0	48	243
08:00 AM	3	49	14	0	66	4	21	16	0	41	4	102	6	0	112	23	27	6	0	56	275
08:15 AM	7	35	9	0	51	8	10	8	0	26	9	73	15	0	97	27	25	2	0	54	228
08:30 AM	13	57	15	0	85	5	20	6	0	31	7	75	10	0	92	32	26	1	0	59	267
Total Volume	29	177	48	0	254	22	71	40	0	133	27	347	35	0	409	105	100	12	0	217	1013
% App. Total	11.4	69.7	18.9	0		16.5	53.4	30.1	0		6.6	84.8	8.6	0		48.4	46.1	5.5	0		
PHF	.558	.776	.800	.000	.747	.688	.845	.625	.000	.811	.750	.850	.583	.000	.913	.820	.926	.500	.000	.919	.921

TechniQuest Corporation

4105 US Route 1, Suite # 14
Monmouth Junction, NJ 08852
Phone: 732-274-9500 Fax: 732-274-9510

File Name : 41-C
Site Code : C
Start Date : 4/30/2008
Page No : 4

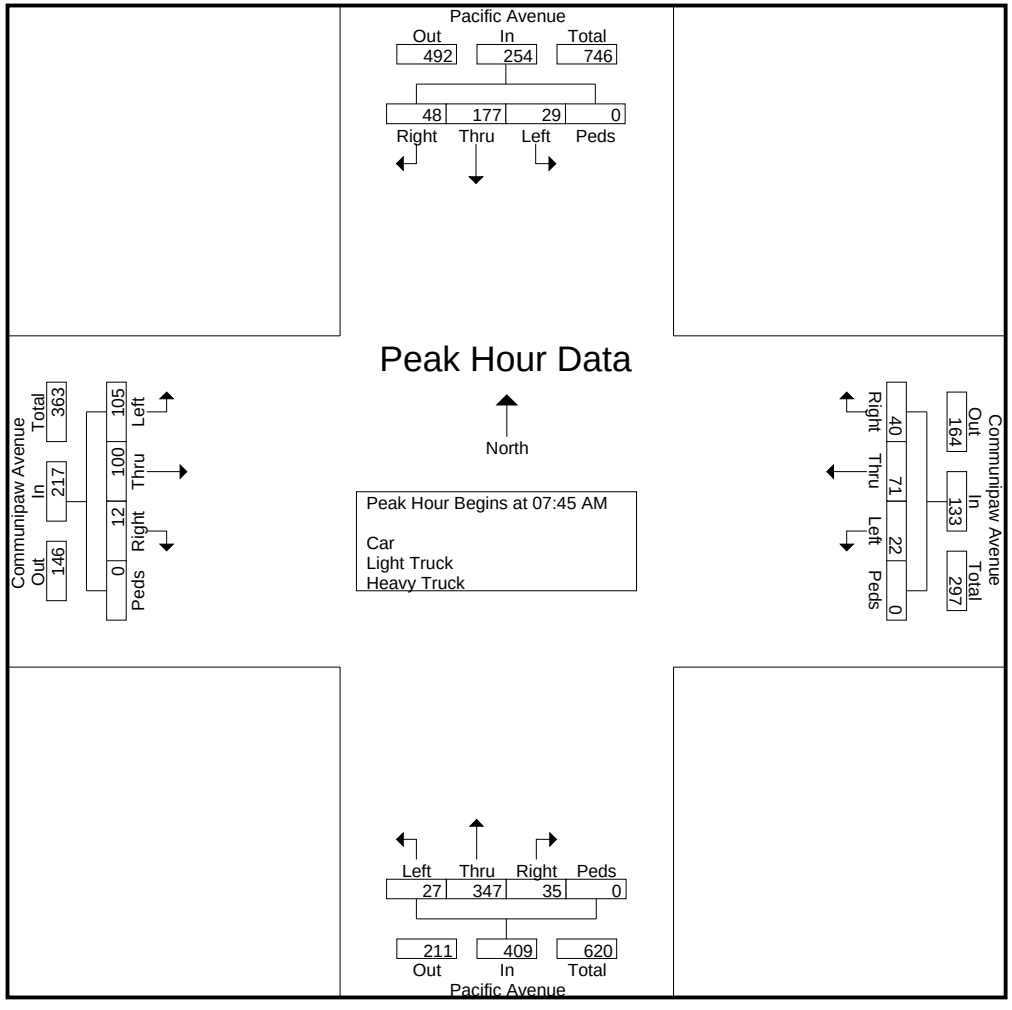

TechniQuest Corporation

4105 US Route 1, Suite # 14
Monmouth Junction, NJ 08852
Phone: 732-274-9500 Fax: 732-274-9510

File Name : 41-C
Site Code : C
Start Date : 4/30/2008
Page No : 5

	Pacific Avenue Southbound					Communipaw Avenue Westbound					Pacific Avenue Northbound					Communipaw Avenue Eastbound					
Start Time	Left	Thru	Right	Peds	App. Total	Left	Thru	Right	Peds	App. Total	Left	Thru	Right	Peds	App. Total	Left	Thru	Right	Peds	App. Total	Int. Total
Peak Hour Analysis From 05:00 PM to 05:45 PM - Peak 1 of 1																					
Peak Hour for Entire Intersection Begins at 05:00 PM																					
05:00 PM	5	45	21	0	71	10	29	4	0	43	19	53	3	0	75	21	16	5	0	42	231
05:15 PM	5	61	24	0	90	3	32	8	0	43	5	41	4	0	50	25	24	7	0	56	239
05:30 PM	14	43	28	0	85	6	31	11	0	48	16	48	2	0	66	16	30	4	0	50	249
05:45 PM	12	47	18	0	77	10	31	9	0	50	12	46	3	0	61	18	27	8	0	53	241
Total Volume	36	196	91	0	323	29	123	32	0	184	52	188	12	0	252	80	97	24	0	201	960
% App. Total	11.1	60.7	28.2	0		15.8	66.8	17.4	0		20.6	74.6	4.8	0		39.8	48.3	11.9	0		
PHF	.643	.803	.813	.000	.897	.725	.961	.727	.000	.920	.684	.887	.750	.000	.840	.800	.808	.750	.000	.897	.964

TechniQuest Corporation

4105 US Route 1, Suite # 14
Monmouth Junction, NJ 08852
Phone: 732-274-9500 Fax: 732-274-9510

File Name : 41-C
Site Code : C
Start Date : 4/30/2008
Page No : 6

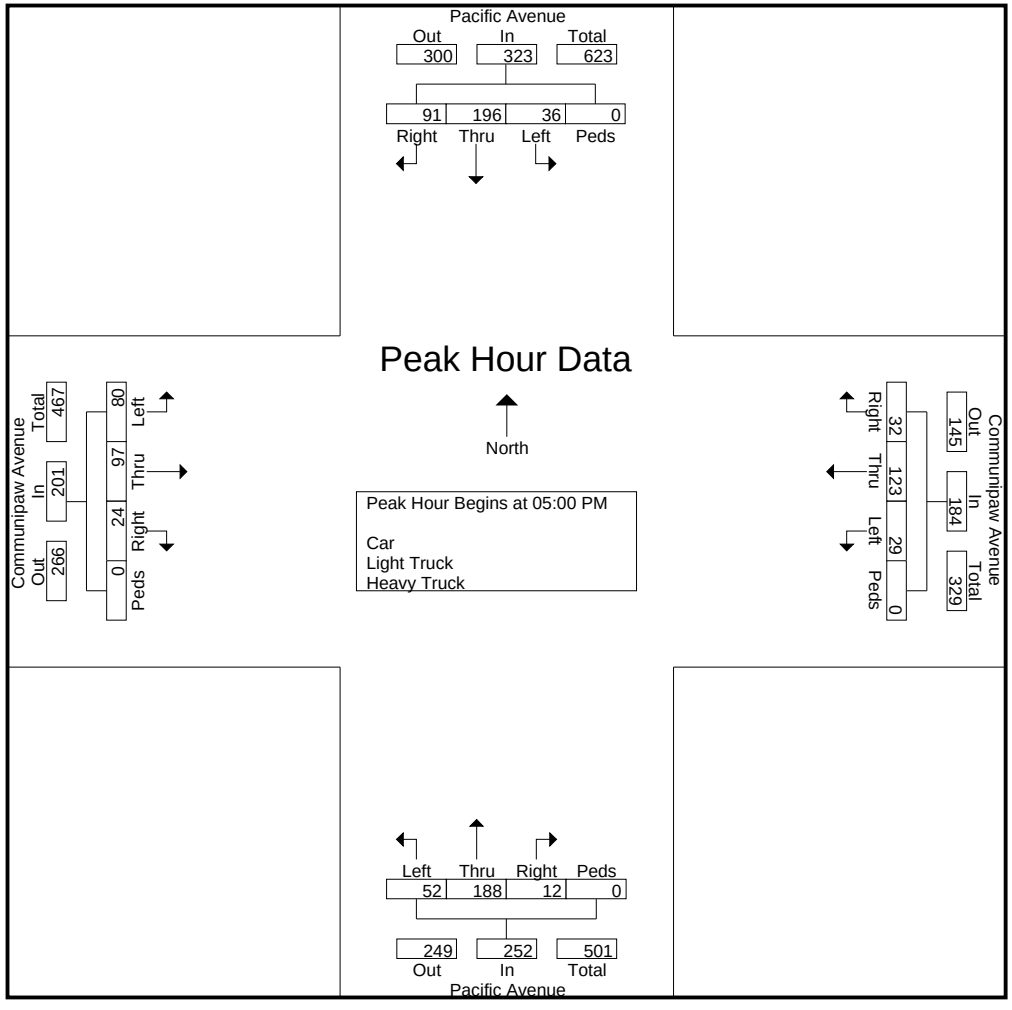

TechniQuest Corporation

4105 US Route 1, Suite # 14
Monmouth Junction, NJ 08852
Phone: 732-274-9500 Fax: 732-274-9510

File Name : 41-C-AM May08
Site Code : C
Start Date : 5/27/2008
Page No : 1

Groups Printed- Car - Light Truck - Heavy Truck

	Pacific Avenue Southbound					Communipaw Avenue Westbound					Pacific Avenue Northbound					Communipaw Avenue Eastbound					
Start Time	Left	Thru	Right	Peds	App. Total	Left	Thru	Right	Peds	App. Total	Left	Thru	Right	Peds	App. Total	Left	Thru	Right	Peds	App. Total	Int. Total
07:45 AM	5	26	9	2	42	8	23	10	6	47	4	97	7	4	112	12	21	3	6	42	243
Total	5	26	9	2	42	8	23	10	6	47	4	97	7	4	112	12	21	3	6	42	243
08:00 AM	4	29	13	0	46	4	25	9	13	51	8	104	9	0	121	19	21	4	7	51	269
08:15 AM	4	39	15	0	58	4	18	8	11	41	6	76	12	3	97	20	26	7	1	54	250
08:30 AM	8	40	21	5	74	2	24	5	8	39	5	65	6	10	86	28	37	3	4	72	271
Grand Total	21	134	58	7	220	18	90	32	38	178	23	342	34	17	416	79	105	17	18	219	1033
Apprch %	9.5	60.9	26.4	3.2		10.1	50.6	18	21.3		5.5	82.2	8.2	4.1		36.1	47.9	7.8	8.2		
Total %	2	13	5.6	0.7	21.3	1.7	8.7	3.1	3.7	17.2	2.2	33.1	3.3	1.6	40.3	7.6	10.2	1.6	1.7	21.2	
Car	18	131	52	7	208	17	85	30	38	170	20	333	33	17	403	67	100	16	18	201	982
% Car	85.7	97.8	89.7	100	94.5	94.4	94.4	93.8	100	95.5	87	97.4	97.1	100	96.9	84.8	95.2	94.1	100	91.8	95.1
Light Truck	3	3	6	0	12	1	4	2	0	7	2	8	1	0	11	11	3	1	0	15	45
% Light Truck	14.3	2.2	10.3	0	5.5	5.6	4.4	6.2	0	3.9	8.7	2.3	2.9	0	2.6	13.9	2.9	5.9	0	6.8	4.4
Heavy Truck	0	0	0	0	0	0	1	0	0	1	1	1	0	0	2	1	2	0	0	3	6
% Heavy Truck	0	0	0	0	0	0	1.1	0	0	0.6	4.3	0.3	0	0	0.5	1.3	1.9	0	0	1.4	0.6

TechniQuest Corporation

4105 US Route 1, Suite # 14
Monmouth Junction, NJ 08852
Phone: 732-274-9500 Fax: 732-274-9510

File Name : 41-C-AM May08
Site Code : C
Start Date : 5/27/2008
Page No : 2

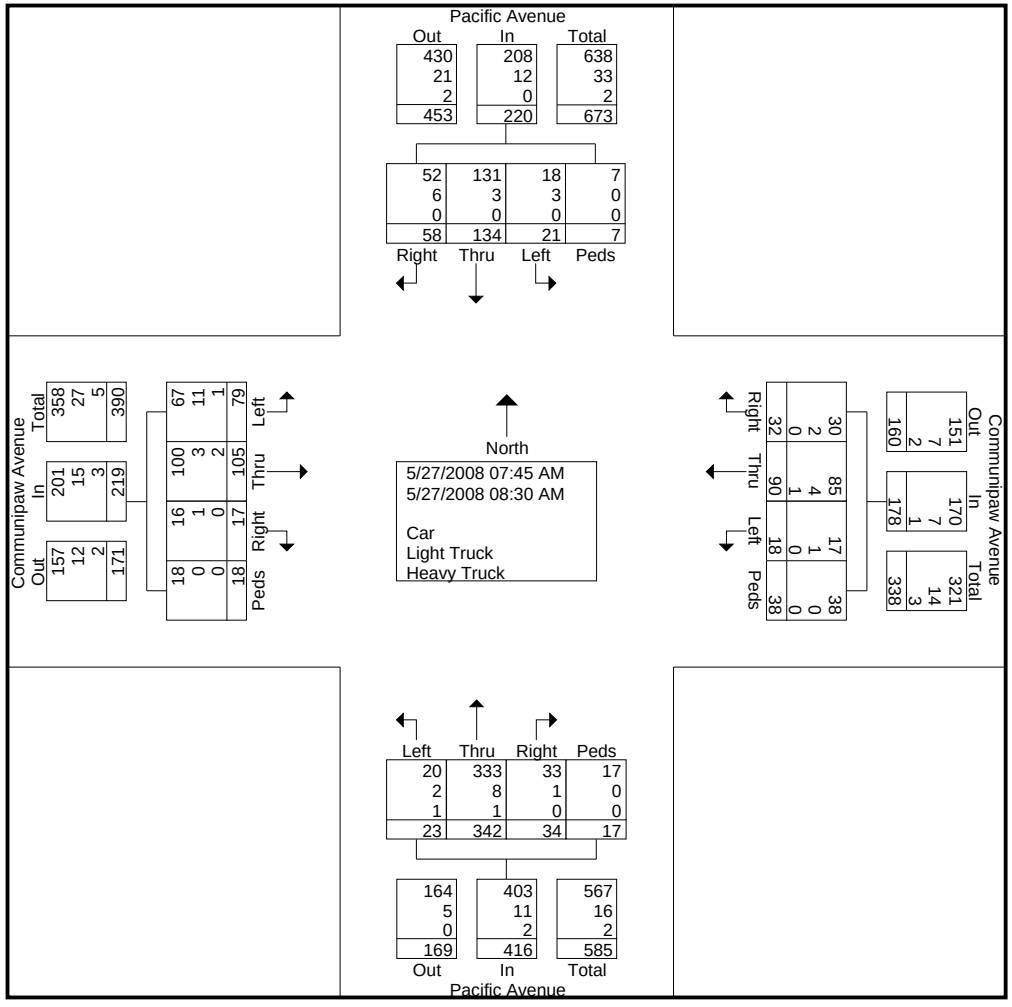

TechniQuest Corporation

4105 US Route 1, Suite # 14
Monmouth Junction, NJ 08852
Phone: 732-274-9500 Fax: 732-274-9510

File Name : 41-C-AM May08
Site Code : C
Start Date : 5/27/2008
Page No : 3

	Pacific Avenue Southbound					Communipaw Avenue Westbound					Pacific Avenue Northbound					Communipaw Avenue Eastbound					
Start Time	Left	Thru	Right	Peds	App. Total	Left	Thru	Right	Peds	App. Total	Left	Thru	Right	Peds	App. Total	Left	Thru	Right	Peds	App. Total	Int. Total
Peak Hour Analysis From 07:45 AM to 08:30 AM - Peak 1 of 1																					
Peak Hour for Entire Intersection Begins at 07:45 AM																					
07:45 AM	5	26	9	2	42	8	23	10	6	47	4	97	7	4	112	12	21	3	6	42	243
08:00 AM	4	29	13	0	46	4	25	9	13	51	8	104	9	0	121	19	21	4	7	51	269
08:15 AM	4	39	15	0	58	4	18	8	11	41	6	76	12	3	97	20	26	7	1	54	250
08:30 AM	8	40	21	5	74	2	24	5	8	39	5	65	6	10	86	28	37	3	4	72	271
Total Volume	21	134	58	7	220	18	90	32	38	178	23	342	34	17	416	79	105	17	18	219	1033
% App. Total	9.5	60.9	26.4	3.2		10.1	50.6	18	21.3		5.5	82.2	8.2	4.1		36.1	47.9	7.8	8.2		
PHF	.656	.838	.690	.350	.743	.563	.900	.800	.731	.873	.719	.822	.708	.425	.860	.705	.709	.607	.643	.760	.953

TechniQuest Corporation

4105 US Route 1, Suite # 14
Monmouth Junction, NJ 08852
Phone: 732-274-9500 Fax: 732-274-9510

File Name : 41-C-AM May08
Site Code : C
Start Date : 5/27/2008
Page No : 4

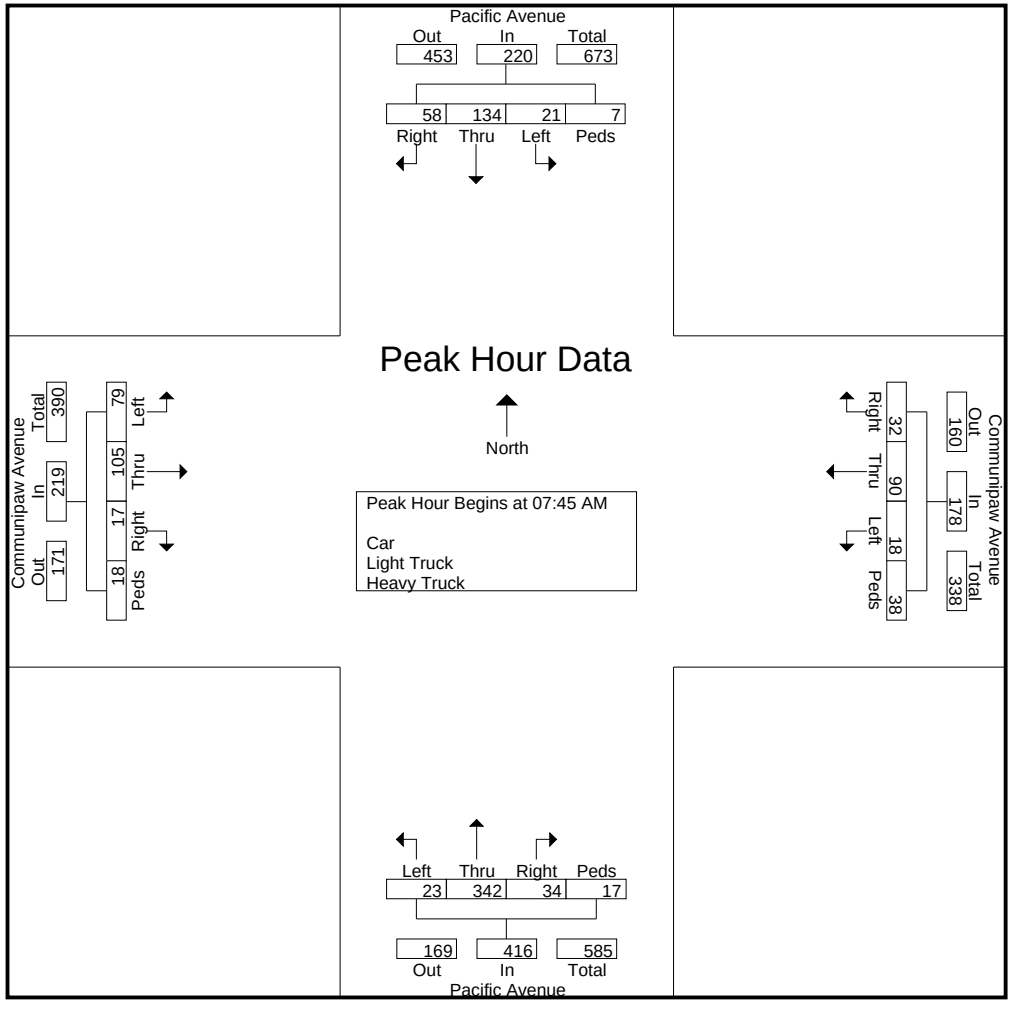

TechniQuest Corporation

4105 US Route 1, Suite # 14
Monmouth Junction, NJ 08852
Phone: 732-274-9500 Fax: 732-274-9510

File Name : 41-C-PM May08
Site Code : C
Start Date : 5/27/2008
Page No : 1

Groups Printed- Car - Light Truck - Heavy Truck

	Pacific Avenue Southbound					Communipaw Avenue Westbound					Pacific Avenue Northbound					Communipaw Avenue Eastbound					
Start Time	Left	Thru	Right	Peds	App. Total	Left	Thru	Right	Peds	App. Total	Left	Thru	Right	Peds	App. Total	Left	Thru	Right	Peds	App. Total	Int. Total
05:00 PM	3	48	9	16	76	9	27	10	6	52	11	42	11	2	66	24	16	3	1	44	238
05:15 PM	14	52	22	18	106	8	32	8	11	59	13	67	3	3	86	21	22	9	10	62	313
05:30 PM	8	62	26	16	112	5	36	4	7	52	9	48	7	5	69	23	26	6	11	66	299
05:45 PM	16	56	14	10	96	11	38	7	20	76	10	57	10	2	79	15	20	3	6	44	295
Total	41	218	71	60	390	33	133	29	44	239	43	214	31	12	300	83	84	21	28	216	1145
Grand Total	41	218	71	60	390	33	133	29	44	239	43	214	31	12	300	83	84	21	28	216	1145
Apprch %	10.5	55.9	18.2	15.4		13.8	55.6	12.1	18.4		14.3	71.3	10.3	4		38.4	38.9	9.7	13		
Total %	3.6	19	6.2	5.2	34.1	2.9	11.6	2.5	3.8	20.9	3.8	18.7	2.7	1	26.2	7.2	7.3	1.8	2.4	18.9	
Car	39	213	64	60	376	33	131	26	44	234	43	212	31	12	298	76	81	20	28	205	1113
% Car	95.1	97.7	90.1	100	96.4	100	98.5	89.7	100	97.9	100	99.1	100	100	99.3	91.6	96.4	95.2	100	94.9	97.2
Light Truck	2	4	7	0	13	0	2	3	0	5	0	2	0	0	2	7	3	1	0	11	31
% Light Truck	4.9	1.8	9.9	0	3.3	0	1.5	10.3	0	2.1	0	0.9	0	0	0.7	8.4	3.6	4.8	0	5.1	2.7
Heavy Truck	0	1	0	0	1	0	0	0	0	0	0	0	0	0	0	0	0	0	0	0	1
% Heavy Truck	0	0.5	0	0	0.3	0	0	0	0	0	0	0	0	0	0	0	0	0	0	0	0.1

TechniQuest Corporation

4105 US Route 1, Suite # 14
Monmouth Junction, NJ 08852
Phone: 732-274-9500 Fax: 732-274-9510

File Name : 41-C-PM May08
Site Code : C
Start Date : 5/27/2008
Page No : 2

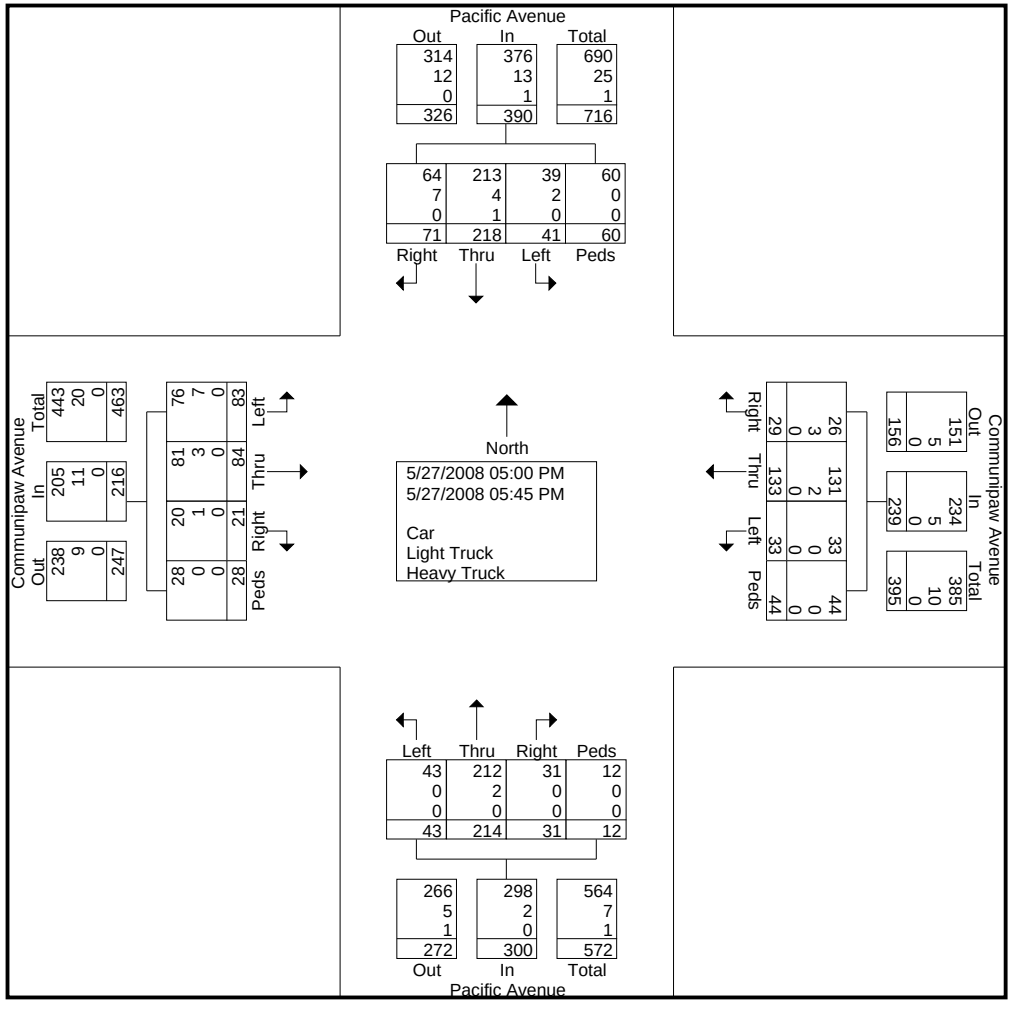

TechniQuest Corporation

4105 US Route 1, Suite # 14
Monmouth Junction, NJ 08852
Phone: 732-274-9500 Fax: 732-274-9510

File Name : 41-C-PM May08
Site Code : C
Start Date : 5/27/2008
Page No : 3

	Pacific Avenue Southbound					Communipaw Avenue Westbound					Pacific Avenue Northbound					Communipaw Avenue Eastbound					
Start Time	Left	Thru	Right	Peds	App. Total	Left	Thru	Right	Peds	App. Total	Left	Thru	Right	Peds	App. Total	Left	Thru	Right	Peds	App. Total	Int. Total
Peak Hour Analysis From 05:00 PM to 05:45 PM - Peak 1 of 1																					
Peak Hour for Entire Intersection Begins at 05:00 PM																					
05:00 PM	3	48	9	16	76	9	27	10	6	52	11	42	11	2	66	24	16	3	1	44	238
05:15 PM	14	52	22	18	106	8	32	8	11	59	13	67	3	3	86	21	22	9	10	62	313
05:30 PM	8	62	26	16	112	5	36	4	7	52	9	48	7	5	69	23	26	6	11	66	299
05:45 PM	16	56	14	10	96	11	38	7	20	76	10	57	10	2	79	15	20	3	6	44	295
Total Volume	41	218	71	60	390	33	133	29	44	239	43	214	31	12	300	83	84	21	28	216	1145
% App. Total	10.5	55.9	18.2	15.4		13.8	55.6	12.1	18.4		14.3	71.3	10.3	4		38.4	38.9	9.7	13		
PHF	.641	.879	.683	.833	.871	.750	.875	.725	.550	.786	.827	.799	.705	.600	.872	.865	.808	.583	.636	.818	.915

TechniQuest Corporation

4105 US Route 1, Suite # 14
Monmouth Junction, NJ 08852
Phone: 732-274-9500 Fax: 732-274-9510

File Name : 41-C-PM May08
Site Code : C
Start Date : 5/27/2008
Page No : 4

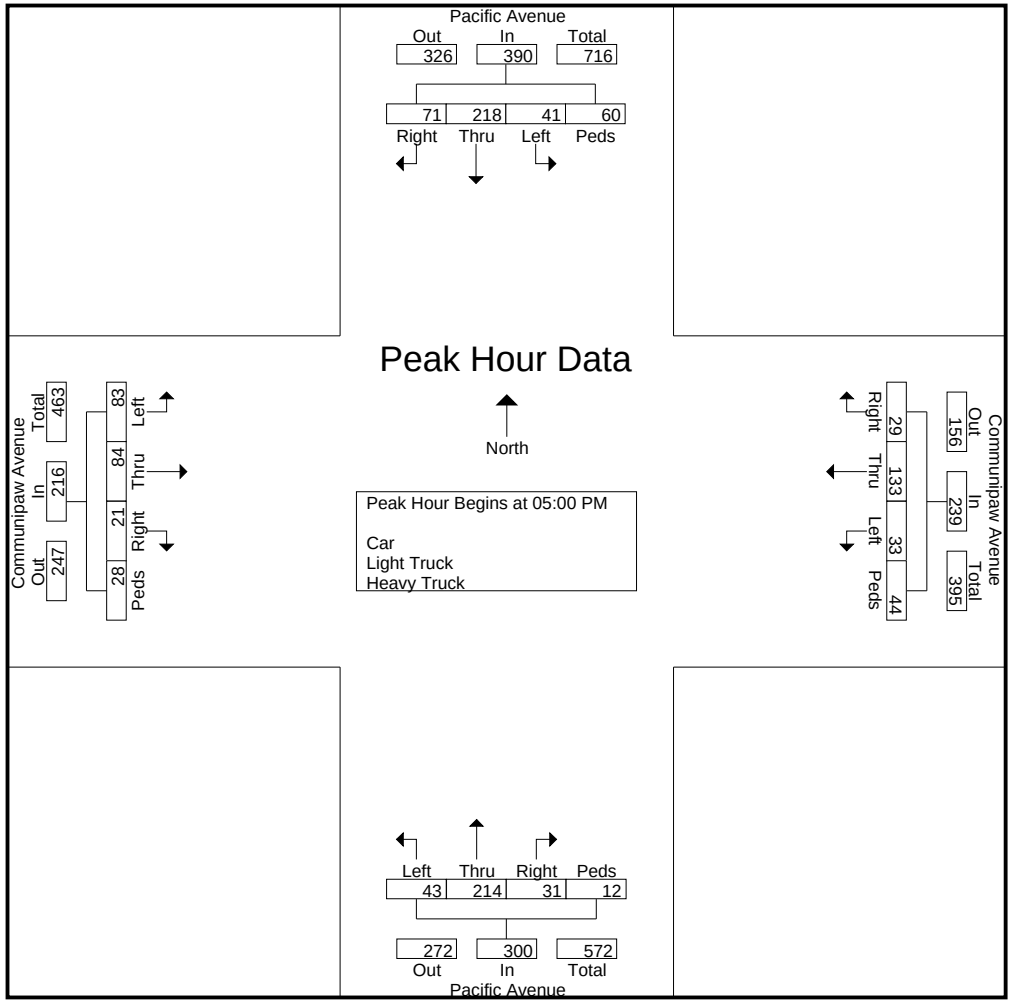

TechniQuest Corporation

4105 US Route 1, Suite # 14
Monmouth Junction, NJ 08852
Phone: 732-274-9500 Fax: 732-274-9510

File Name : 41-D
Site Code : D
Start Date : 5/1/2008
Page No : 1

Groups Printed- Total Vehicles

	Southbound					Grand Street Westbound					Pacific Avenue Northbound					Grand Street Eastbound					
Start Time	Left	Thru	Right	Peds	App. Total	Left	Thru	Right	Peds	App. Total	Left	Thru	Right	Peds	App. Total	Left	Thru	Right	Peds	App. Total	Int. Total
07:00 AM	0	0	0	0	0	59	92	0	0	151	0	0	234	0	234	0	207	2	0	209	594
07:15 AM	0	0	0	0	0	62	117	0	0	179	0	0	255	0	255	0	219	0	0	219	653
07:30 AM	0	0	0	0	0	91	132	0	0	223	0	0	309	0	309	0	223	0	0	223	755
07:45 AM	0	0	0	0	0	93	120	0	0	213	0	0	302	0	302	0	237	2	0	239	754
Total	0	0	0	0	0	305	461	0	0	766	0	0	1100	0	1100	0	886	4	0	890	2756
08:00 AM	0	0	0	0	0	115	121	0	0	236	0	0	291	0	291	0	225	0	0	225	752
08:15 AM	0	0	0	0	0	117	120	0	0	237	0	0	283	0	283	0	214	0	0	214	734
08:30 AM	0	0	0	0	0	112	130	0	0	242	0	0	275	0	275	0	218	0	0	218	735
08:45 AM	0	0	0	0	0	96	114	0	0	210	0	0	218	0	218	0	177	1	0	178	606
Total	0	0	0	0	0	440	485	0	0	925	0	0	1067	0	1067	0	834	1	0	835	2827
09:00 AM	0	0	0	0	0	58	88	0	0	146	0	0	162	0	162	0	151	0	0	151	459
09:15 AM	0	0	0	0	0	67	80	0	0	147	0	0	147	0	147	0	170	2	0	172	466
09:30 AM	0	0	0	0	0	64	93	0	0	157	0	0	127	0	127	0	123	1	0	124	408
09:45 AM	0	0	0	0	0	70	96	0	0	166	0	0	124	0	124	0	104	3	0	107	397
Total	0	0	0	0	0	259	357	0	0	616	0	0	560	0	560	0	548	6	0	554	1730
*** BREAK ***																					
11:00 AM	0	0	0	0	0	86	123	0	0	209	0	0	125	0	125	0	125	1	0	126	460
11:15 AM	0	0	0	0	0	79	145	0	0	224	0	0	132	0	132	0	124	3	0	127	483
11:30 AM	0	0	0	0	0	87	141	0	0	228	0	0	114	0	114	0	142	0	0	142	484
11:45 AM	0	0	0	0	0	79	109	0	0	188	0	0	100	0	100	0	133	0	0	133	421
Total	0	0	0	0	0	331	518	0	0	849	0	0	471	0	471	0	524	4	0	528	1848
12:00 PM	0	0	0	0	0	76	103	0	0	179	0	0	106	0	106	0	102	0	0	102	387
12:15 PM	0	0	0	0	0	93	149	0	0	242	0	0	110	0	110	0	136	0	0	136	488
12:30 PM	0	0	0	0	0	108	154	0	0	262	0	0	108	0	108	0	135	1	0	136	506
12:45 PM	0	0	0	0	0	99	166	0	0	265	0	0	128	0	128	0	136	0	0	136	529
Total	0	0	0	0	0	376	572	0	0	948	0	0	452	0	452	0	509	1	0	510	1910
01:00 PM	0	0	0	0	0	70	117	0	0	187	0	0	118	0	118	0	138	1	0	139	444
01:15 PM	0	0	0	0	0	80	116	0	0	196	0	0	114	0	114	0	123	0	0	123	433
01:30 PM	0	0	0	0	0	80	111	0	0	191	0	0	99	0	99	0	100	0	0	100	390
01:45 PM	0	0	0	0	0	97	123	0	0	220	0	0	85	0	85	0	119	0	0	119	424
Total	0	0	0	0	0	327	467	0	0	794	0	0	416	0	416	0	480	1	0	481	1691

TechniQuest Corporation

4105 US Route 1, Suite # 14
Monmouth Junction, NJ 08852
Phone: 732-274-9500 Fax: 732-274-9510

File Name : 41-D
Site Code : D
Start Date : 5/1/2008
Page No : 2

Groups Printed- Total Vehicles

	Southbound					Grand Street Westbound					Pacific Avenue Northbound					Grand Street Eastbound					
Start Time	Left	Thru	Right	Peds	App. Total	Left	Thru	Right	Peds	App. Total	Left	Thru	Right	Peds	App. Total	Left	Thru	Right	Peds	App. Total	Int. Total
*** BREAK ***																					
03:00 PM	0	0	0	0	0	167	251	0	0	418	0	0	140	0	140	0	170	1	0	171	729
03:15 PM	0	0	0	0	0	188	264	0	0	452	0	0	123	0	123	0	154	0	0	154	729
03:30 PM	0	0	0	0	0	129	258	0	0	387	0	0	140	0	140	0	172	1	0	173	700
03:45 PM	0	0	0	0	0	125	209	0	0	334	0	0	115	0	115	0	154	2	0	156	605
Total	0	0	0	0	0	609	982	0	0	1591	0	0	518	0	518	0	650	4	0	654	2763
04:00 PM	0	0	0	0	0	129	200	0	0	329	0	0	147	0	147	0	159	1	0	160	636
04:15 PM	0	0	0	0	0	142	264	0	0	406	0	0	123	0	123	0	158	2	0	160	689
04:30 PM	0	0	0	0	0	160	237	0	0	397	0	0	143	0	143	0	146	1	0	147	687
04:45 PM	0	0	0	0	0	169	247	0	0	416	0	0	156	0	156	0	153	0	0	153	725
Total	0	0	0	0	0	600	948	0	0	1548	0	0	569	0	569	0	616	4	0	620	2737
05:00 PM	0	0	0	0	0	140	208	0	0	348	0	0	142	0	142	0	115	1	0	116	606
05:15 PM	0	0	0	0	0	170	301	0	0	471	0	0	141	0	141	0	173	1	0	174	786
05:30 PM	0	0	0	0	0	169	269	0	0	438	0	0	155	0	155	0	144	1	0	145	738
05:45 PM	0	0	0	0	0	181	270	0	0	451	0	0	150	0	150	0	181	1	0	182	783
Total	0	0	0	0	0	660	1048	0	0	1708	0	0	588	0	588	0	613	4	0	617	2913
Grand Total	0	0	0	0	0	3907	5838	0	0	9745	0	0	5741	0	5741	0	5660	29	0	5689	21175
Apprch %	0	0	0	0		40.1	59.9	0	0		0	0	100	0		0	99.5	0.5	0		
Total %	0	0	0	0	0	18.5	27.6	0	0	46	0	0	27.1	0	27.1	0	26.7	0.1	0	26.9	

TechniQuest Corporation

4105 US Route 1, Suite # 14
Monmouth Junction, NJ 08852
Phone: 732-274-9500 Fax: 732-274-9510

File Name : 41-D
Site Code : D
Start Date : 5/1/2008

	Southbound					Grand Street Westbound					Pacific Avenue Northbound					Grand Street Eastbound					
Start Time	Left	Thru	Right	Peds	App. Total	Left	Thru	Right	Peds	App. Total	Left	Thru	Right	Peds	App. Total	Left	Thru	Right	Peds	App. Total	Int. Total
Peak Hour Analysis From 07:45 AM to 08:30 AM - Peak 1 of 1																					
Peak Hour for Entire Intersection Begins at 07:45 AM																					
07:45 AM	0	0	0	0	0	93	120	0	0	213	0	0	302	0	302	0	237	2	0	239	754
08:00 AM	0	0	0	0	0	115	121	0	0	236	0	0	291	0	291	0	225	0	0	225	752
08:15 AM	0	0	0	0	0	117	120	0	0	237	0	0	283	0	283	0	214	0	0	214	734
08:30 AM	0	0	0	0	0	112	130	0	0	242	0	0	275	0	275	0	218	0	0	218	735
Total Volume	0	0	0	0	0	437	491	0	0	928	0	0	1151	0	1151	0	894	2	0	896	2975
% App. Total	0	0	0	0		47.1	52.9	0	0		0	0	100	0		0	99.8	0.2	0		
PHF	.000	.000	.000	.000	.000	.934	.944	.000	.000	.959	.000	.000	.953	.000	.953	.000	.943	.250	.000	.937	.986

TechniQuest Corporation

4105 US Route 1, Suite # 14
Monmouth Junction, NJ 08852
Phone: 732-274-9500 Fax: 732-274-9510

File Name : 41-D
Site Code : D
Start Date : 5/1/2008
Page No : 4

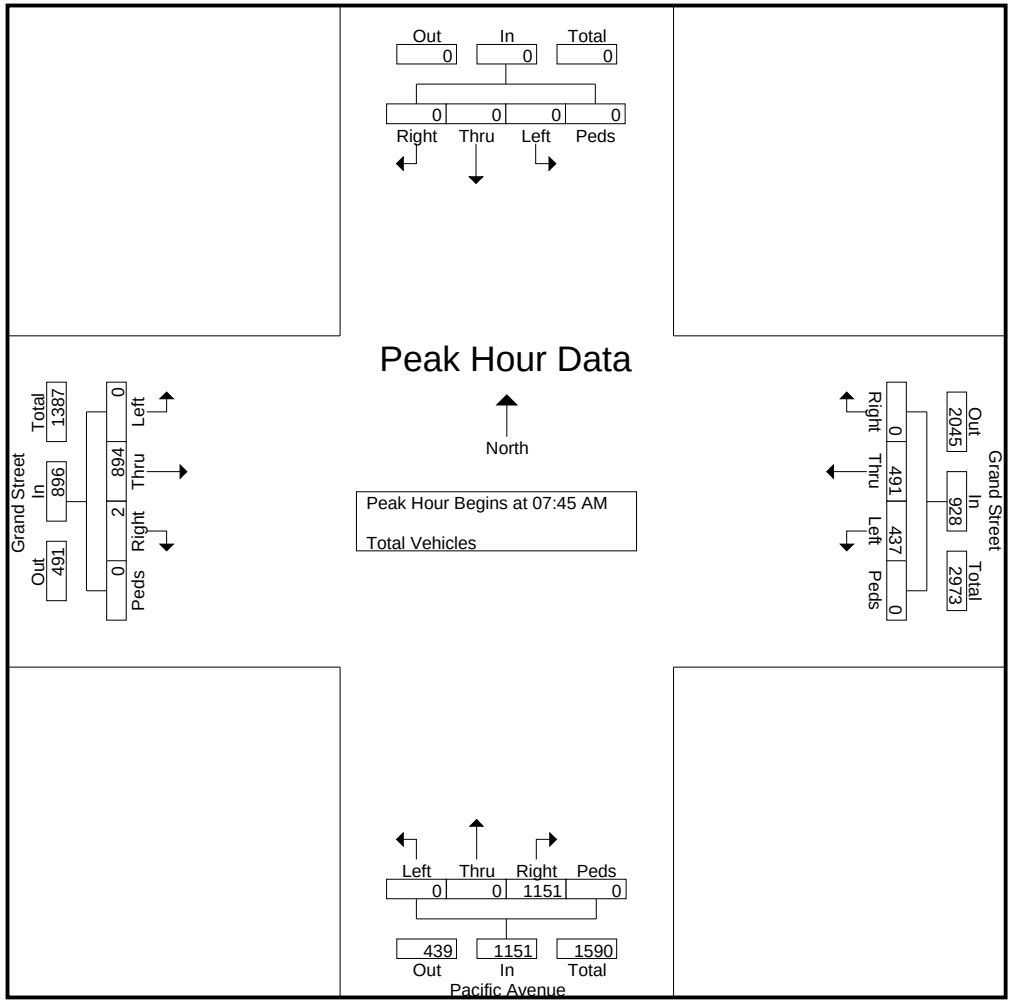

TechniQuest Corporation

4105 US Route 1, Suite # 14
Monmouth Junction, NJ 08852
Phone: 732-274-9500 Fax: 732-274-9510

File Name : 41-D
Site Code : D
Start Date : 5/1/2008
Page No : 5

	Southbound					Grand Street Westbound					Pacific Avenue Northbound					Grand Street Eastbound					
Start Time	Left	Thru	Right	Peds	App. Total	Left	Thru	Right	Peds	App. Total	Left	Thru	Right	Peds	App. Total	Left	Thru	Right	Peds	App. Total	Int. Total
Peak Hour Analysis From 05:00 PM to 05:45 PM - Peak 1 of 1																					
Peak Hour for Entire Intersection Begins at 05:00 PM																					
05:00 PM	0	0	0	0	0	140	208	0	0	348	0	0	142	0	142	0	115	1	0	116	606
05:15 PM	0	0	0	0	0	170	301	0	0	471	0	0	141	0	141	0	173	1	0	174	786
05:30 PM	0	0	0	0	0	169	269	0	0	438	0	0	155	0	155	0	144	1	0	145	738
05:45 PM	0	0	0	0	0	181	270	0	0	451	0	0	150	0	150	0	181	1	0	182	783
Total Volume	0	0	0	0	0	660	1048	0	0	1708	0	0	588	0	588	0	613	4	0	617	2913
% App. Total	0	0	0	0		38.6	61.4	0	0		0	0	100	0		0	99.4	0.6	0		
PHF	.000	.000	.000	.000	.000	.912	.870	.000	.000	.907	.000	.000	.948	.000	.948	.000	.847	1.000	.000	.848	.927

TechniQuest Corporation

4105 US Route 1, Suite # 14
Monmouth Junction, NJ 08852
Phone: 732-274-9500 Fax: 732-274-9510

File Name : 41-D
Site Code : D
Start Date : 5/1/2008
Page No : 6

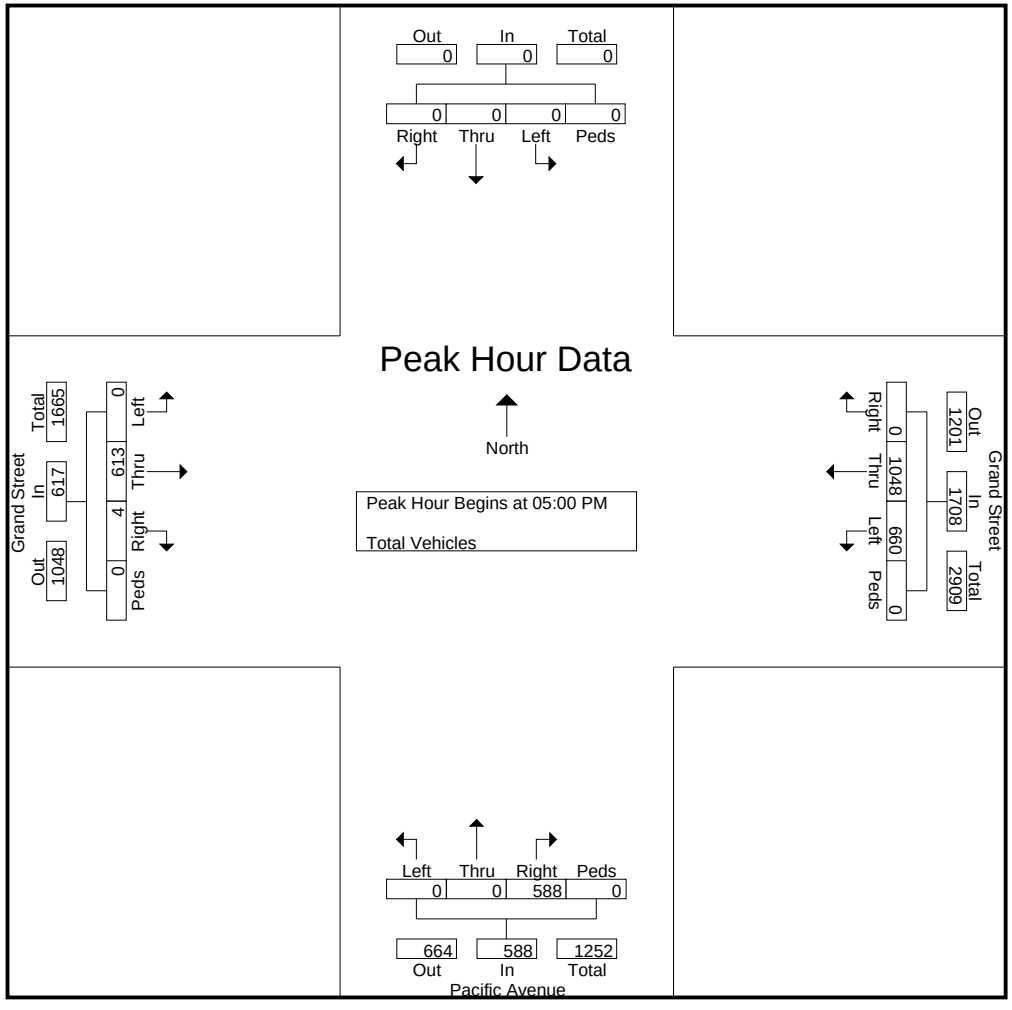

TechniQuest Corporation

4105 US Route 1, Suite # 14
Monmouth Junction, NJ 08852
Phone: 732-274-9500 Fax: 732-274-9510

File Name : 41-D-AM May08
Site Code : D
Start Date : 5/27/2008
Page No : 1

Groups Printed- Cars - Light Trucks - Heavy Trucks

	Southbound					Grant Street Westbound					Pacific Avenue Northbound					Grant Street Eastbound					
Start Time	Left	Thru	Right	Peds	App. Total	Left	Thru	Right	Peds	App. Total	Left	Thru	Right	Peds	App. Total	Left	Thru	Right	Peds	App. Total	Int. Total
07:45 AM	0	0	0	8	8	68	116	0	8	192	0	0	173	0	173	0	238	0	0	238	611
Total	0	0	0	8	8	68	116	0	8	192	0	0	173	0	173	0	238	0	0	238	611
08:00 AM	0	0	0	14	14	77	131	0	15	223	0	0	216	6	222	0	265	0	0	265	724
08:15 AM	0	0	0	12	12	89	145	0	12	246	0	0	203	0	203	0	212	1	12	225	686
08:30 AM	0	0	0	10	10	82	131	0	6	219	0	0	177	0	177	0	180	0	0	180	586
Grand Total	0	0	0	44	44	316	523	0	41	880	0	0	769	6	775	0	895	1	12	908	2607
Apprch %	0	0	0	100		35.9	59.4	0	4.7		0	0	99.2	0.8		0	98.6	0.1	1.3		
Total %	0	0	0	1.7	1.7	12.1	20.1	0	1.6	33.8	0	0	29.5	0.2	29.7	0	34.3	0	0.5	34.8	
Cars	0	0	0	44	44	306	515	0	41	862	0	0	762	6	768	0	869	1	12	882	2556
% Cars	0	0	0	100	100	96.8	98.5	0	100	98	0	0	99.1	100	99.1	0	97.1	100	100	97.1	98
Light Trucks	0	0	0	0	0	7	4	0	0	11	0	0	4	0	4	0	17	0	0	17	32
% Light Trucks	0	0	0	0	0	2.2	0.8	0	0	1.2	0	0	0.5	0	0.5	0	1.9	0	0	1.9	1.2
Heavy Trucks	0	0	0	0	0	3	4	0	0	7	0	0	3	0	3	0	9	0	0	9	19
% Heavy Trucks																					

TechniQuest Corporation

4105 US Route 1, Suite # 14
Monmouth Junction, NJ 08852
Phone: 732-274-9500 Fax: 732-274-9510

File Name : 41-D-AM May08
Site Code : D
Start Date : 5/27/2008
Page No : 2

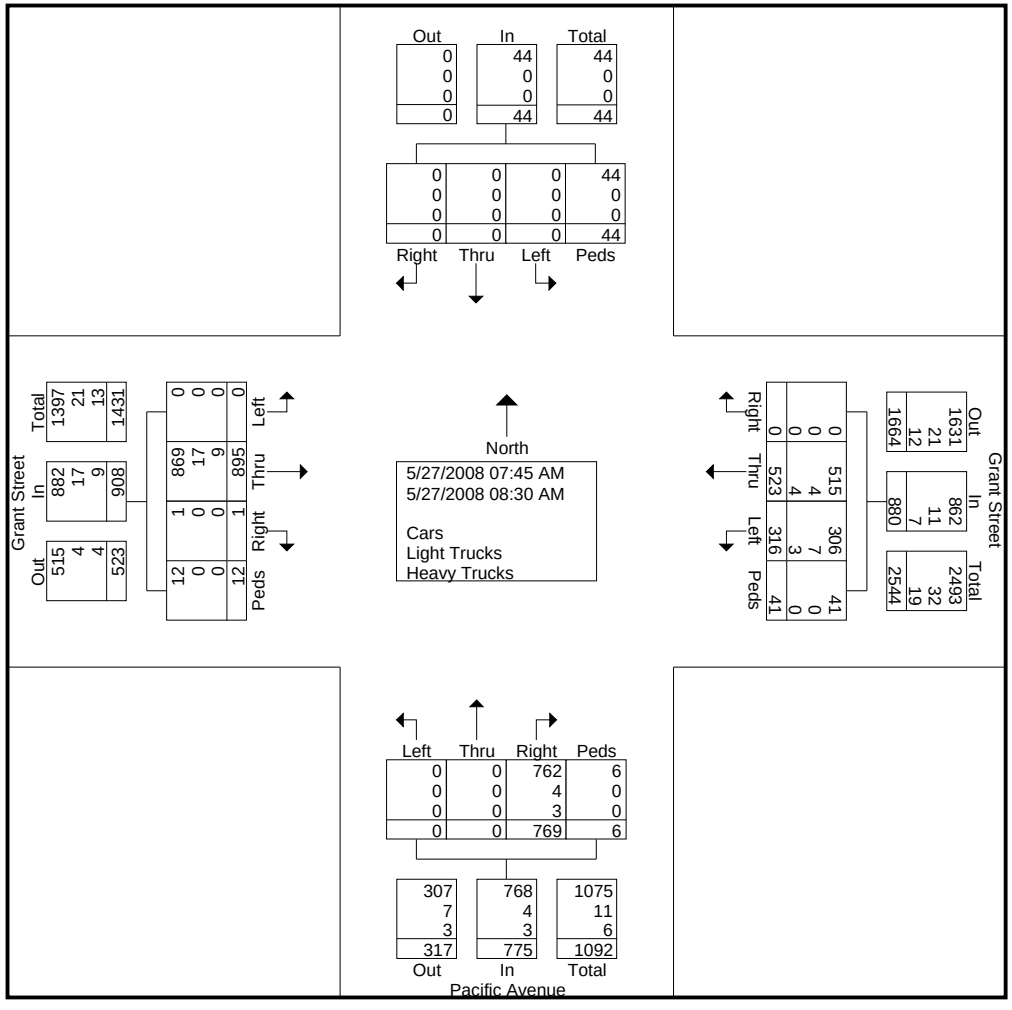

TechniQuest Corporation

4105 US Route 1, Suite # 14
Monmouth Junction, NJ 08852
Phone: 732-274-9500 Fax: 732-274-9510

File Name : 41-D-AM May08
Site Code : D
Start Date : 5/27/2008
Page No : 3

	Southbound					Grant Street Westbound					Pacific Avenue Northbound					Grant Street Eastbound					
Start Time	Left	Thru	Right	Peds	App. Total	Left	Thru	Right	Peds	App. Total	Left	Thru	Right	Peds	App. Total	Left	Thru	Right	Peds	App. Total	Int. Total
Peak Hour Analysis From 07:45 AM to 08:30 AM - Peak 1 of 1																					
Peak Hour for Entire Intersection Begins at 07:45 AM																					
07:45 AM	0	0	0	8	8	68	116	0	8	192	0	0	173	0	173	0	238	0	0	238	611
08:00 AM	0	0	0	14	14	77	131	0	15	223	0	0	216	6	222	0	265	0	0	265	724
08:15 AM	0	0	0	12	12	89	145	0	12	246	0	0	203	0	203	0	212	1	12	225	686
08:30 AM	0	0	0	10	10	82	131	0	6	219	0	0	177	0	177	0	180	0	0	180	586
Total Volume	0	0	0	44	44	316	523	0	41	880	0	0	769	6	775	0	895	1	12	908	2607
% App. Total	0	0	0	100		35.9	59.4	0	4.7		0	0	99.2	0.8		0	98.6	0.1	1.3		
PHF	.000	.000	.000	.786	.786	.888	.902	.000	.683	.894	.000	.000	.890	.250	.873	.000	.844	.250	.250	.857	.900

TechniQuest Corporation

4105 US Route 1, Suite # 14
Monmouth Junction, NJ 08852
Phone: 732-274-9500 Fax: 732-274-9510

File Name : 41-D-AM May08
Site Code : D
Start Date : 5/27/2008
Page No : 4

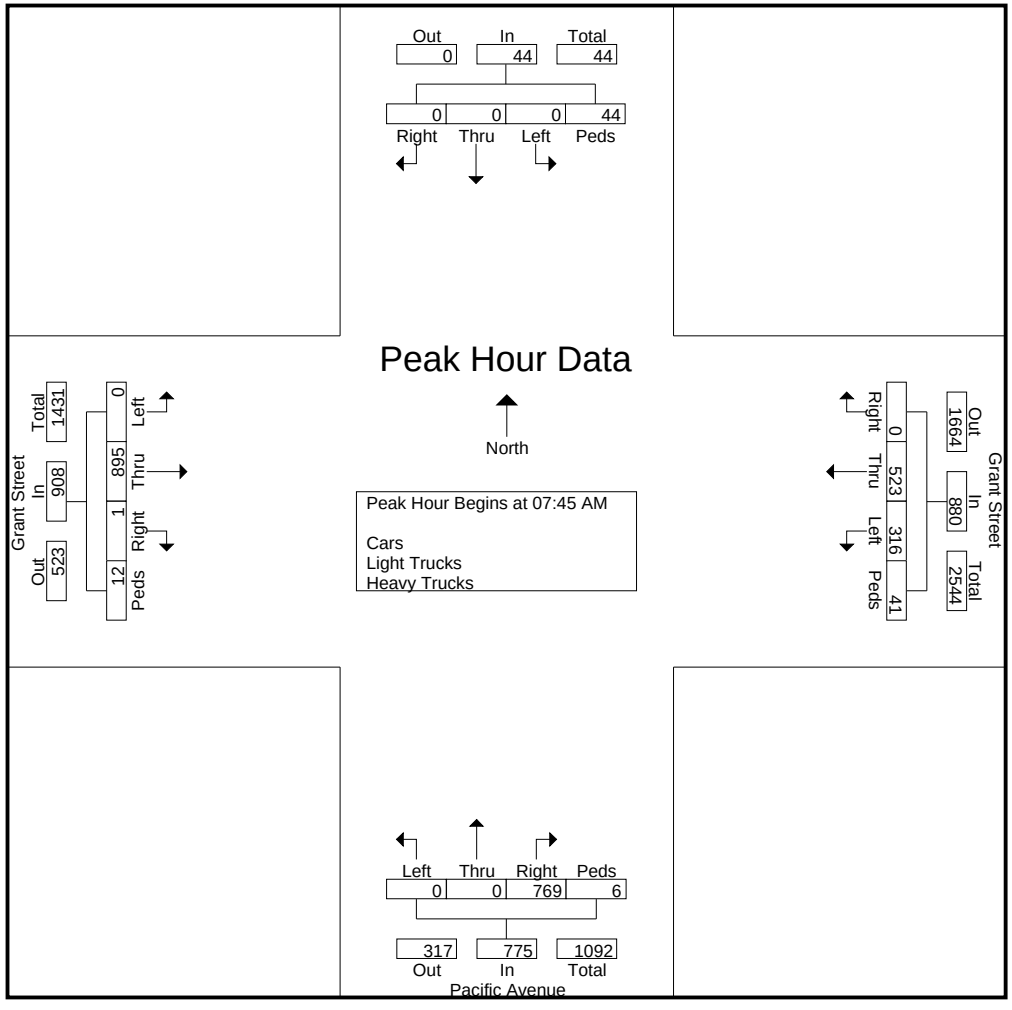

TechniQuest Corporation

4105 US Route 1, Suite # 14
Monmouth Junction, NJ 08852
Phone: 732-274-9500 Fax: 732-274-9510

File Name : 41-D-PM May08
Site Code : D
Start Date : 5/27/2008
Page No : 1

Groups Printed- Total Vehicles - Bank 1 - Bank 2

	Southbound					Grant Street Westbound					Pacific Avenue Northbound					Grant Street Eastbound					
Start Time	Left	Thru	Right	Peds	App. Total	Left	Thru	Right	Peds	App. Total	Left	Thru	Right	Peds	App. Total	Left	Thru	Right	Peds	App. Total	Int. Total
05:00 PM	0	0	0	0	0	80	222	0	0	302	0	0	83	0	83	0	126	2	0	128	513
05:15 PM	0	0	0	0	0	93	235	0	0	328	0	0	92	0	92	0	147	1	0	148	568
05:30 PM	0	0	0	0	0	112	248	0	0	360	0	0	90	0	90	0	134	3	0	137	587
05:45 PM	0	0	0	0	0	95	252	0	0	347	0	0	95	0	95	0	105	2	0	107	549
Total	0	0	0	0	0	380	957	0	0	1337	0	0	360	0	360	0	512	8	0	520	2217
Grand Total	0	0	0	0	0	380	957	0	0	1337	0	0	360	0	360	0	512	8	0	520	2217
Apprch %	0	0	0	0		28.4	71.6	0	0		0	0	100	0		0	98.5	1.5	0		
Total %	0	0	0	0	0	17.1	43.2	0	0	60.3	0	0	16.2	0	16.2	0	23.1	0.4	0	23.5	
Total Vehicles	0	0	0	0	0	380	957	0	0	1337	0	0	360	0	360	0	512	8	0	520	2217
% Total Vehicles																					
Bank 1	0	0	0	0	0	0	0	0	0	0	0	0	0	0	0	0	0	0	0	0	0
% Bank 1	0	0	0	0	0	0	0	0	0	0	0	0	0	0	0	0	0	0	0	0	0
Bank 2	0	0	0	0	0	0	0	0	0	0	0	0	0	0	0	0	0	0	0	0	0
% Bank 2	0	0	0	0	0	0	0	0	0	0	0	0	0	0	0	0	0	0	0	0	0

TechniQuest Corporation

4105 US Route 1, Suite # 14
Monmouth Junction, NJ 08852
Phone: 732-274-9500 Fax: 732-274-9510

File Name : 41-D-PM May08
Site Code : D
Start Date : 5/27/2008
Page No : 2

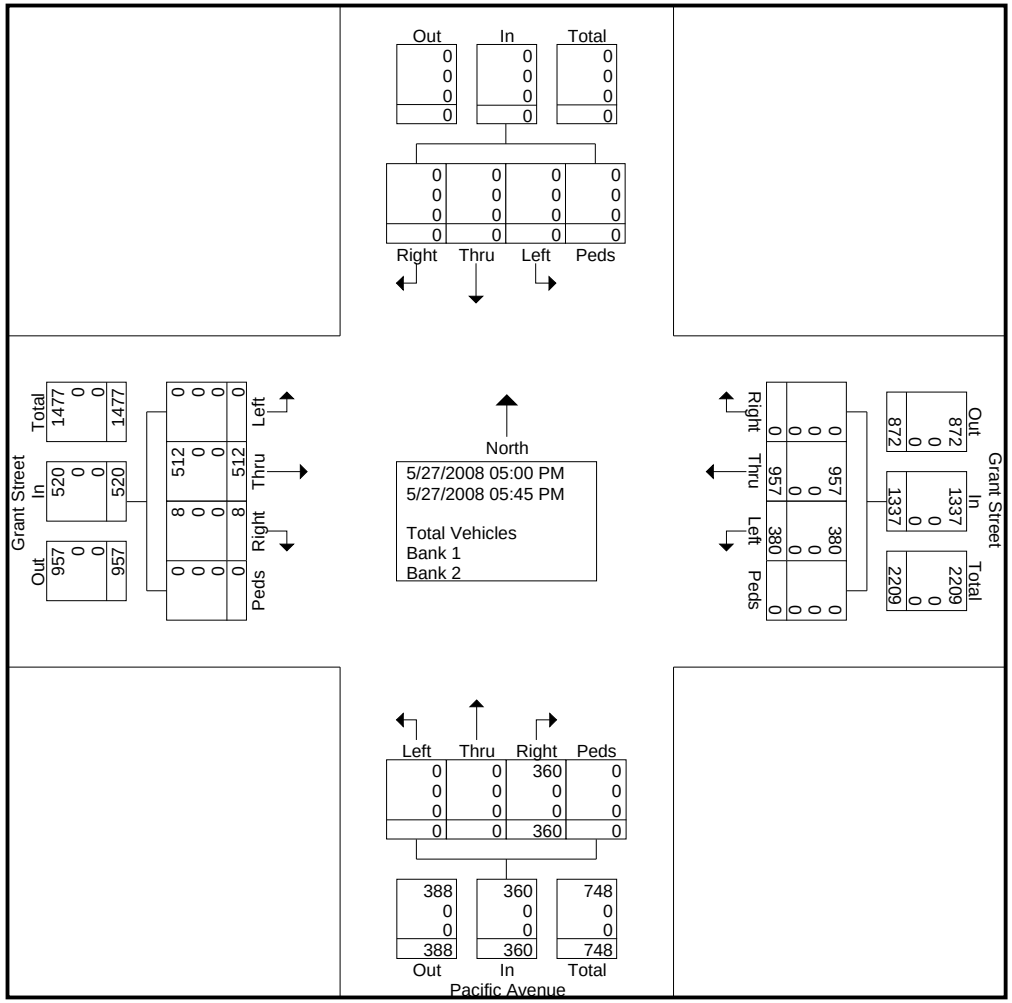

TechniQuest Corporation

4105 US Route 1, Suite # 14
Monmouth Junction, NJ 08852
Phone: 732-274-9500 Fax: 732-274-9510

File Name : 41-D-PM May08
Site Code : D
Start Date : 5/27/2008

	Southbound					Grant Street Westbound					Pacific Avenue Northbound					Grant Street Eastbound					
Start Time	Left	Thru	Right	Peds	App. Total	Left	Thru	Right	Peds	App. Total	Left	Thru	Right	Peds	App. Total	Left	Thru	Right	Peds	App. Total	Int. Total
Peak Hour Analysis From 05:00 PM to 05:45 PM - Peak 1 of 1																					
Peak Hour for Entire Intersection Begins at 05:00 PM																					
05:00 PM	0	0	0	0	0	80	222	0	0	302	0	0	83	0	83	0	126	2	0	128	513
05:15 PM	0	0	0	0	0	93	235	0	0	328	0	0	92	0	92	0	147	1	0	148	568
05:30 PM	0	0	0	0	0	112	248	0	0	360	0	0	90	0	90	0	134	3	0	137	587
05:45 PM	0	0	0	0	0	95	252	0	0	347	0	0	95	0	95	0	105	2	0	107	549
Total Volume	0	0	0	0	0	380	957	0	0	1337	0	0	360	0	360	0	512	8	0	520	2217
% App. Total	0	0	0	0		28.4	71.6	0	0		0	0	100	0		0	98.5	1.5	0		
PHF	.000	.000	.000	.000	.000	.848	.949	.000	.000	.928	.000	.000	.947	.000	.947	.000	.871	.667	.000	.878	.944

TechniQuest Corporation

4105 US Route 1, Suite # 14
Monmouth Junction, NJ 08852
Phone: 732-274-9500 Fax: 732-274-9510

File Name : 41-D-PM May08
Site Code : D
Start Date : 5/27/2008
Page No : 4

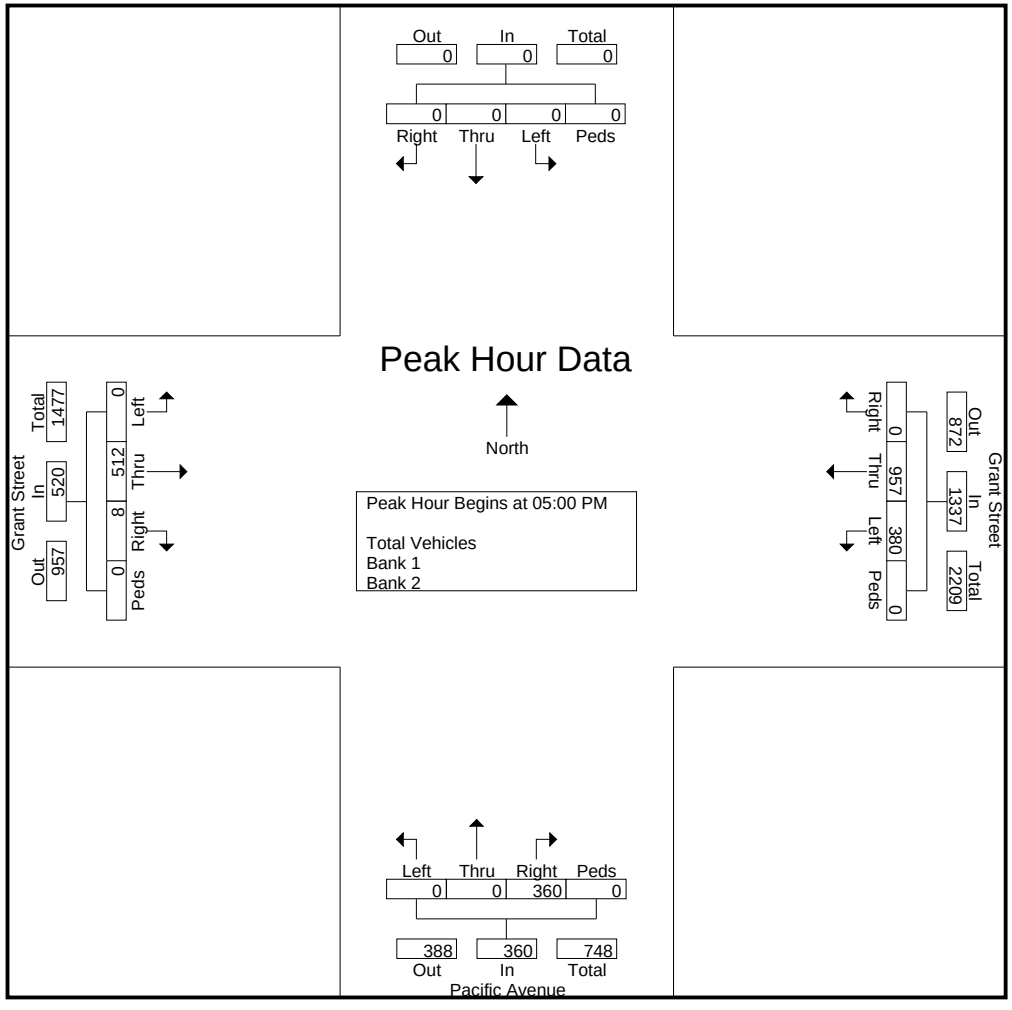

TechniQuest Corporation

4105 US Route 1, Suite # 14
Monmouth Junction, NJ 08852
Phone: 732-274-9500 Fax: 732-274-9510

File Name : 41-E
Site Code : E
Start Date : 5/6/2008
Page No : 1

Groups Printed- Car - Light Truck - Heavy Truck

	Garfield Avenue Southbound					Caven Point Avenue Westbound					Garfield Avenue Northbound					Eastbound					
Start Time	Left	Thru	Right	Peds	App. Total	Left	Thru	Right	Peds	App. Total	Left	Thru	Right	Peds	App. Total	Left	Thru	Right	Peds	App. Total	Int. Total
07:00 AM	6	62	0	0	68	29	0	9	0	38	0	109	56	0	165	0	0	0	0	0	271
07:15 AM	6	82	0	0	88	29	0	5	0	34	0	123	60	0	183	0	0	0	0	0	305
07:30 AM	9	88	0	0	97	31	0	3	0	34	0	146	58	0	204	0	0	0	0	0	335
07:45 AM	5	94	0	0	99	34	0	3	0	37	0	169	77	0	246	0	0	0	0	0	382
Total	26	326	0	0	352	123	0	20	0	143	0	547	251	0	798	0	0	0	0	0	1293
08:00 AM	7	84	0	0	91	33	0	3	0	36	0	130	63	0	193	0	0	0	0	0	320
08:15 AM	9	100	0	0	109	36	0	4	0	40	0	128	57	0	185	0	0	0	0	0	334
08:30 AM	10	103	0	0	113	34	0	4	0	38	0	127	60	0	187	0	0	0	0	0	338
08:45 AM	7	87	0	0	94	32	0	5	0	37	0	124	52	0	176	0	0	0	0	0	307
Total	33	374	0	0	407	135	0	16	0	151	0	509	232	0	741	0	0	0	0	0	1299
09:00 AM	8	85	0	0	93	24	0	3	0	27	0	69	46	0	115	0	0	0	0	0	235
09:15 AM	8	90	0	0	98	13	0	1	0	14	0	80	39	0	119	0	0	0	0	0	231
09:30 AM	6	84	0	0	90	24	0	5	0	29	0	72	33	0	105	0	0	0	0	0	224
09:45 AM	6	71	0	0	77	19	0	4	0	23	0	57	28	0	85	0	0	0	0	0	185
Total	28	330	0	0	358	80	0	13	0	93	0	278	146	0	424	0	0	0	0	0	875
*** BREAK ***																					
11:00 AM	5	29	0	0	34	32	0	3	0	35	0	38	22	0	60	0	0	0	0	0	129
11:15 AM	7	39	0	0	46	32	0	5	0	37	0	45	28	0	73	0	0	0	0	0	156
11:30 AM	5	29	0	0	34	28	0	7	0	35	0	33	35	0	68	0	0	0	0	0	137
11:45 AM	14	59	0	0	73	24	0	5	0	29	0	52	25	0	77	0	0	0	0	0	179
Total	31	156	0	0	187	116	0	20	0	136	0	168	110	0	278	0	0	0	0	0	601
12:00 PM	5	90	0	0	95	33	0	5	0	38	0	89	26	0	115	0	0	0	0	0	248
12:15 PM	10	73	0	0	83	34	0	6	0	40	0	67	37	0	104	0	0	0	0	0	227
12:30 PM	12	94	0	0	106	33	0	5	0	38	0	64	29	0	93	0	0	0	0	0	237
12:45 PM	10	51	0	0	61	39	0	10	0	49	0	65	33	0	98	0	0	0	0	0	208
Total	37	308	0	0	345	139	0	26	0	165	0	285	125	0	410	0	0	0	0	0	920
01:00 PM	10	36	0	0	46	31	0	6	0	37	0	49	40	0	89	0	0	0	0	0	172
01:15 PM	5	56	0	0	61	31	0	8	0	39	0	70	32	0	102	0	0	0	0	0	202
01:30 PM	3	59	0	0	62	30	0	4	0	34	0	61	36	0	97	0	0	0	0	0	193
01:45 PM	8	52	0	0	60	29	0	6	0	35	0	57	35	0	92	0	0	0	0	0	187
Total	26	203	0	0	229	121	0	24	0	145	0	237	143	0	380	0	0	0	0	0	754

TechniQuest Corporation

4105 US Route 1, Suite # 14
Monmouth Junction, NJ 08852
Phone: 732-274-9500 Fax: 732-274-9510

File Name : 41-E
Site Code : E
Start Date : 5/6/2008
Page No : 2

Groups Printed- Car - Light Truck - Heavy Truck

	Garfield Avenue Southbound					Caven Point Avenue Westbound					Garfield Avenue Northbound					Eastbound					
Start Time	Left	Thru	Right	Peds	App. Total	Left	Thru	Right	Peds	App. Total	Left	Thru	Right	Peds	App. Total	Left	Thru	Right	Peds	App. Total	Int. Total
*** BREAK ***																					
03:00 PM	6	72	0	0	78	63	0	7	0	70	0	55	46	0	101	0	0	0	0	0	249
03:15 PM	7	76	0	0	83	78	0	4	0	82	0	63	46	0	109	0	0	0	0	0	274
03:30 PM	5	120	0	0	125	71	0	14	0	85	0	71	35	0	106	0	0	0	0	0	316
03:45 PM	4	115	0	0	119	52	0	11	0	63	0	90	21	0	111	0	0	0	0	0	293
Total	22	383	0	0	405	264	0	36	0	300	0	279	148	0	427	0	0	0	0	0	1132
04:00 PM	5	112	0	0	117	48	0	7	0	55	0	116	31	0	147	0	0	0	0	0	319
04:15 PM	9	91	0	0	100	47	0	0	0	47	0	110	33	0	143	0	0	0	0	0	290
04:30 PM	8	74	0	0	82	55	0	5	0	60	0	103	38	0	141	0	0	0	0	0	283
04:45 PM	8	71	0	0	79	50	0	6	0	56	0	88	38	0	126	0	0	0	0	0	261
Total	30	348	0	0	378	200	0	18	0	218	0	417	140	0	557	0	0	0	0	0	1153
05:00 PM	4	87	0	0	91	67	0	6	0	73	0	106	29	0	135	0	0	0	0	0	299
05:15 PM	8	81	0	0	89	59	0	2	0	61	0	107	42	0	149	0	0	0	0	0	299
05:30 PM	3	72	0	0	75	55	0	4	0	59	0	107	43	0	150	0	0	0	0	0	284
05:45 PM	3	93	0	0	96	59	0	4	0	63	0	136	25	0	161	0	0	0	0	0	320
Total	18	333	0	0	351	240	0	16	0	256	0	456	139	0	595	0	0	0	0	0	1202
Grand Total	251	2761	0	0	3012	1418	0	189	0	1607	0	3176	1434	0	4610	0	0	0	0	0	9229
Apprch %	8.3	91.7	0	0		88.2	0	11.8	0		0	68.9	31.1	0		0	0	0	0		
Total %	2.7	29.9	0	0	32.6	15.4	0	2	0	17.4	0	34.4	15.5	0	50	0	0	0	0	0	
Car	213	2631	0	0	2844	1292	0	154	0	1446	0	3041	1286	0	4327	0	0	0	0	0	8617
% Car	84.9	95.3	0	0	94.4	91.1	0	81.5	0	90	0	95.7	89.7	0	93.9	0	0	0	0	0	93.4
Light Truck	13	92	0	0	105	29	0	16	0	45	0	92	43	0	135	0	0	0	0	0	285
% Light Truck	5.2	3.3	0	0	3.5	2	0	8.5	0	2.8	0	2.9	3	0	2.9	0	0	0	0	0	3.1
Heavy Truck	25	38	0	0	63	97	0	19	0	116	0	43	105	0	148	0	0	0	0	0	327
% Heavy Truck	10	1.4	0	0	2.1	6.8	0	10.1	0	7.2	0	1.4	7.3	0	3.2	0	0	0	0	0	3.5

TechniQuest Corporation

4105 US Route 1, Suite # 14
Monmouth Junction, NJ 08852
Phone: 732-274-9500 Fax: 732-274-9510

File Name : 41-E
Site Code : E
Start Date : 5/6/2008
Page No : 3

	Garfield Avenue Southbound					Caven Point Avenue Westbound					Garfield Avenue Northbound					Eastbound					
Start Time	Left	Thru	Right	Peds	App. Total	Left	Thru	Right	Peds	App. Total	Left	Thru	Right	Peds	App. Total	Left	Thru	Right	Peds	App. Total	Int. Total
Peak Hour Analysis From 07:45 AM to 08:30 AM - Peak 1 of 1																					
Peak Hour for Entire Intersection Begins at 07:45 AM																					
07:45 AM	5	94	0	0	99	34	0	3	0	37	0	169	77	0	246	0	0	0	0	0	382
08:00 AM	7	84	0	0	91	33	0	3	0	36	0	130	63	0	193	0	0	0	0	0	320
08:15 AM	9	100	0	0	109	36	0	4	0	40	0	128	57	0	185	0	0	0	0	0	334
08:30 AM	10	103	0	0	113	34	0	4	0	38	0	127	60	0	187	0	0	0	0	0	338
Total Volume	31	381	0	0	412	137	0	14	0	151	0	554	257	0	811	0	0	0	0	0	1374
% App. Total	7.5	92.5	0	0		90.7	0	9.3	0		0	68.3	31.7	0		0	0	0	0		
PHF	.775	.925	.000	.000	.912	.951	.000	.875	.000	.944	.000	.820	.834	.000	.824	.000	.000	.000	.000	.000	.899

TechniQuest Corporation

4105 US Route 1, Suite # 14
Monmouth Junction, NJ 08852
Phone: 732-274-9500 Fax: 732-274-9510

File Name : 41-E
Site Code : E
Start Date : 5/6/2008
Page No : 4

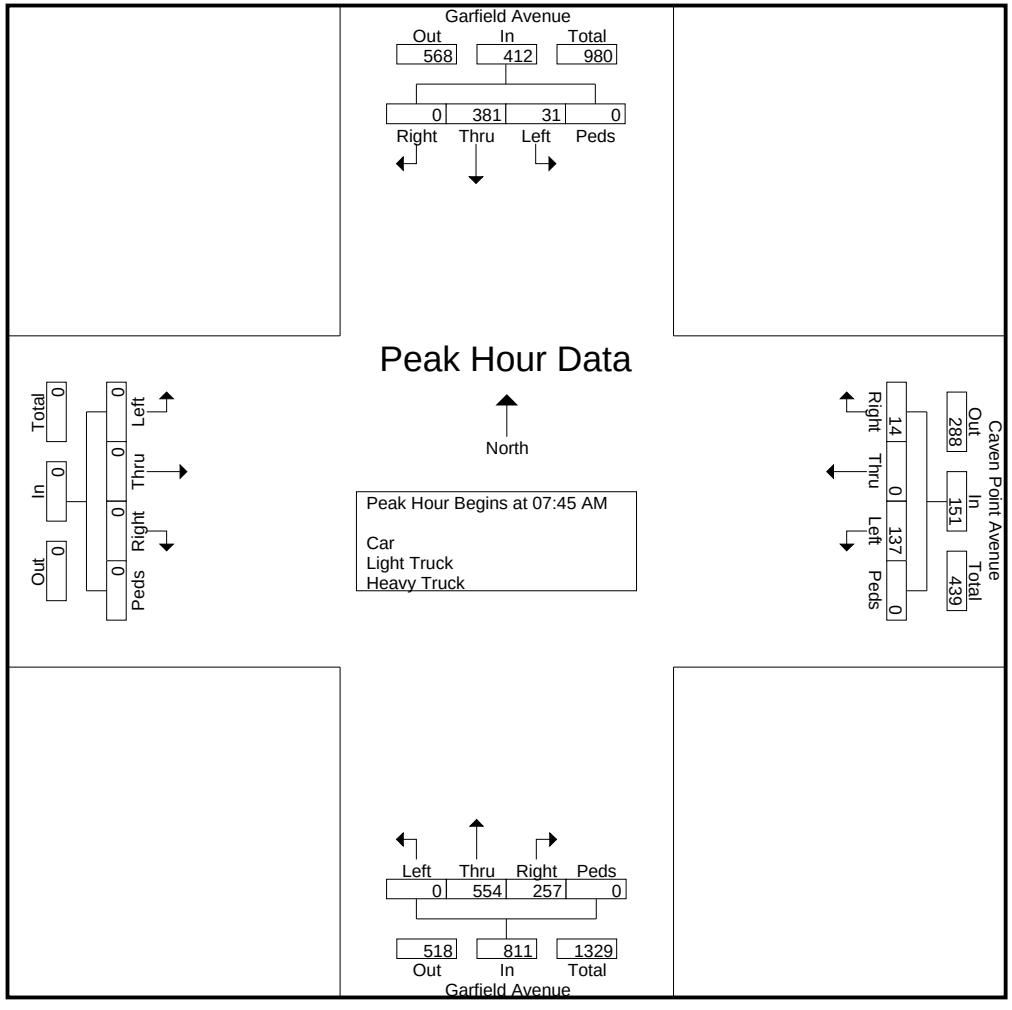

TechniQuest Corporation

4105 US Route 1, Suite # 14
Monmouth Junction, NJ 08852
Phone: 732-274-9500 Fax: 732-274-9510

File Name : 41-E
Site Code : E
Start Date : 5/6/2008
Page No : 5

	Garfield Avenue Southbound					Caven Point Avenue Westbound					Garfield Avenue Northbound					Eastbound					
Start Time	Left	Thru	Right	Peds	App. Total	Left	Thru	Right	Peds	App. Total	Left	Thru	Right	Peds	App. Total	Left	Thru	Right	Peds	App. Total	Int. Total
Peak Hour Analysis From 05:00 PM to 05:45 PM - Peak 1 of 1																					
Peak Hour for Entire Intersection Begins at 05:00 PM																					
05:00 PM	4	87	0	0	91	67	0	6	0	73	0	106	29	0	135	0	0	0	0	0	299
05:15 PM	8	81	0	0	89	59	0	2	0	61	0	107	42	0	149	0	0	0	0	0	299
05:30 PM	3	72	0	0	75	55	0	4	0	59	0	107	43	0	150	0	0	0	0	0	284
05:45 PM	3	93	0	0	96	59	0	4	0	63	0	136	25	0	161	0	0	0	0	0	320
Total Volume	18	333	0	0	351	240	0	16	0	256	0	456	139	0	595	0	0	0	0	0	1202
% App. Total	5.1	94.9	0	0		93.8	0	6.2	0		0	76.6	23.4	0		0	0	0	0		
PHF	.563	.895	.000	.000	.914	.896	.000	.667	.000	.877	.000	.838	.808	.000	.924	.000	.000	.000	.000	.000	.939

TechniQuest Corporation

4105 US Route 1, Suite # 14
Monmouth Junction, NJ 08852
Phone: 732-274-9500 Fax: 732-274-9510

File Name : 41-E
Site Code : E
Start Date : 5/6/2008
Page No : 6

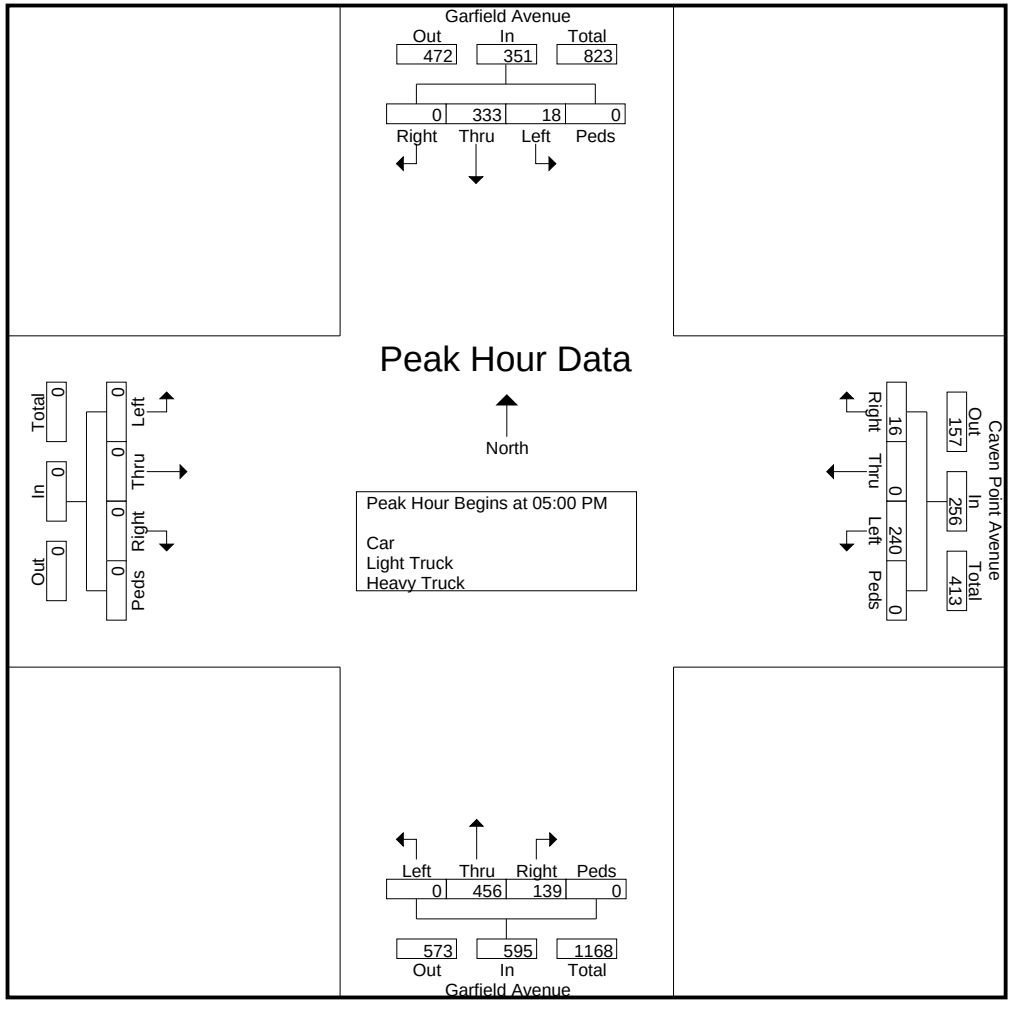

TechniQuest Corporation

4105 US Route 1, Suite # 14
Monmouth Junction, NJ 08852
Phone: 732-274-9500 Fax: 732-274-9510

File Name : 41-F
Site Code : F
Start Date : 5/6/2008
Page No : 1

Groups Printed- Car - Light Truck - Heavy Truck

	Garfield Avenue Southbound					Carteret Avenue Westbound					Garfield Avenue Northbound					Carteret Avenue Eastbound					
Start Time	Left	Thru	Right	Peds	App. Total	Left	Thru	Right	Peds	App. Total	Left	Thru	Right	Peds	App. Total	Left	Thru	Right	Peds	App. Total	Int. Total
07:00 AM	2	62	4	0	68	1	4	1	0	6	2	116	0	0	118	2	12	5	0	19	211
07:15 AM	4	85	4	0	93	1	5	1	0	7	1	122	4	0	127	4	11	3	0	18	245
07:30 AM	4	93	5	0	102	0	2	0	0	2	0	143	4	0	147	8	28	5	0	41	292
07:45 AM	5	96	8	0	109	1	2	1	0	4	2	179	4	0	185	6	20	3	0	29	327
Total	15	336	21	0	372	3	13	3	0	19	5	560	12	0	577	20	71	16	0	107	1075
08:00 AM	3	82	4	0	89	3	8	5	0	16	4	119	8	0	131	9	21	7	0	37	273
08:15 AM	1	95	3	0	99	4	4	2	0	10	1	126	5	0	132	1	16	10	0	27	268
08:30 AM	2	104	9	0	115	2	3	1	0	6	2	117	5	0	124	7	23	7	0	37	282
08:45 AM	2	86	10	0	98	1	1	3	0	5	1	123	3	0	127	9	14	7	0	30	260
Total	8	367	26	0	401	10	16	11	0	37	8	485	21	0	514	26	74	31	0	131	1083
09:00 AM	6	89	7	0	102	3	3	4	0	10	3	69	4	0	76	5	12	1	0	18	206
09:15 AM	4	96	6	0	106	2	6	6	0	14	1	84	7	0	92	6	10	0	0	16	228
09:30 AM	6	84	9	0	99	2	4	0	0	6	3	62	12	0	77	2	4	5	0	11	193
09:45 AM	3	69	5	0	77	3	1	5	0	9	0	53	8	0	61	4	13	5	0	22	169
Total	19	338	27	0	384	10	14	15	0	39	7	268	31	0	306	17	39	11	0	67	796
*** BREAK ***																					
11:00 AM	2	20	9	0	31	7	7	5	0	19	7	65	2	0	74	5	6	8	0	19	143
11:15 AM	1	31	4	0	36	7	5	1	0	13	8	61	6	0	75	5	12	8	0	25	149
11:30 AM	2	27	4	0	33	1	4	5	0	10	5	42	4	1	52	5	12	6	0	23	118
11:45 AM	2	60	4	0	66	9	2	4	0	15	6	61	5	0	72	5	7	4	0	16	169
Total	7	138	21	0	166	24	18	15	0	57	26	229	17	1	273	20	37	26	0	83	579
12:00 PM	5	73	10	0	88	8	9	7	0	24	6	81	7	0	94	5	16	11	0	32	238
12:15 PM	3	72	6	0	81	8	5	0	0	13	4	70	1	0	75	5	12	3	0	20	189
12:30 PM	4	97	9	0	110	3	5	0	0	8	3	62	4	0	69	6	10	6	0	22	209
12:45 PM	2	55	5	0	62	5	0	0	0	5	2	66	7	0	75	9	9	1	0	19	161
Total	14	297	30	0	341	24	19	7	0	50	15	279	19	0	313	25	47	21	0	93	797
01:00 PM	4	37	4	0	45	7	6	2	0	15	6	62	7	0	75	5	5	2	0	12	147
01:15 PM	1	53	14	0	68	6	5	0	0	11	3	71	4	0	78	5	7	2	0	14	171
01:30 PM	5	53	3	0	61	7	8	1	0	16	7	56	3	0	66	6	7	3	0	16	159
01:45 PM	8	50	4	0	62	3	6	1	0	10	3	53	2	0	58	8	15	6	0	29	159
Total	18	193	25	0	236	23	25	4	0	52	19	242	16	0	277	24	34	13	0	71	636

TechniQuest Corporation

4105 US Route 1, Suite # 14
Monmouth Junction, NJ 08852
Phone: 732-274-9500 Fax: 732-274-9510

File Name : 41-F
Site Code : F
Start Date : 5/6/2008
Page No : 2

Groups Printed- Car - Light Truck - Heavy Truck

	Garfield Avenue Southbound					Carteret Avenue Westbound					Garfield Avenue Northbound					Carteret Avenue Eastbound					
Start Time	Left	Thru	Right	Peds	App. Total	Left	Thru	Right	Peds	App. Total	Left	Thru	Right	Peds	App. Total	Left	Thru	Right	Peds	App. Total	Int. Total
*** BREAK ***																					
03:00 PM	2	130	5	0	137	6	7	5	0	18	1	99	6	0	106	5	4	1	0	10	271
03:15 PM	5	121	7	0	133	6	9	3	0	18	2	102	6	0	110	5	11	2	0	18	279
03:30 PM	3	119	9	0	131	6	10	4	0	20	7	100	9	0	116	6	12	1	0	19	286
03:45 PM	4	107	9	0	120	0	2	0	0	2	0	126	4	0	130	9	8	4	0	21	273
Total	14	477	30	0	521	18	28	12	0	58	10	427	25	0	462	25	35	8	0	68	1109
04:00 PM	1	109	7	0	117	1	2	1	0	4	5	145	3	0	153	8	13	7	0	28	302
04:15 PM	3	95	6	0	104	2	10	2	0	14	2	140	7	0	149	3	14	3	0	20	287
04:30 PM	1	65	8	0	74	5	2	4	0	11	6	135	11	0	152	5	8	12	0	25	262
04:45 PM	1	67	12	0	80	6	7	4	0	17	5	121	5	0	131	9	10	8	0	27	255
Total	6	336	33	0	375	14	21	11	0	46	18	541	26	0	585	25	45	30	0	100	1106
05:00 PM	2	78	6	0	86	9	5	7	0	21	7	151	11	0	169	3	12	4	0	19	295
05:15 PM	3	82	12	0	97	4	0	1	0	5	3	152	8	0	163	6	13	3	0	22	287
05:30 PM	1	68	7	0	76	1	1	0	0	2	1	173	2	0	176	4	16	6	0	26	280
05:45 PM	2	80	15	0	97	4	11	3	0	18	6	143	4	0	153	10	9	7	0	26	294
Total	8	308	40	0	356	18	17	11	0	46	17	619	25	0	661	23	50	20	0	93	1156
Grand Total	109	2790	253	0	3152	144	171	89	0	404	125	3650	192	1	3968	205	432	176	0	813	8337
Apprch %	3.5	88.5	8	0		35.6	42.3	22	0		3.2	92	4.8	0		25.2	53.1	21.6	0		
Total %	1.3	33.5	3	0	37.8	1.7	2.1	1.1	0	4.8	1.5	43.8	2.3	0	47.6	2.5	5.2	2.1	0	9.8	
Car	87	2544	242	0	2873	128	158	80	0	366	114	3478	179	1	3772	188	405	172	0	765	7776
% Car	79.8	91.2	95.7	0	91.1	88.9	92.4	89.9	0	90.6	91.2	95.3	93.2	100	95.1	91.7	93.8	97.7	0	94.1	93.3
Light Truck	13	185	11	0	209	6	9	4	0	19	9	120	8	0	137	17	25	4	0	46	411
% Light Truck	11.9	6.6	4.3	0	6.6	4.2	5.3	4.5	0	4.7	7.2	3.3	4.2	0	3.5	8.3	5.8	2.3	0	5.7	4.9
Heavy Truck	9	61	0	0	70	10	4	5	0	19	2	52	5	0	59	0	2	0	0	2	150
% Heavy Truck	8.3	2.2	0	0	2.2	6.9	2.3	5.6	0	4.7	1.6	1.4	2.6	0	1.5	0	0.5	0	0	0.2	1.8

TechniQuest Corporation

4105 US Route 1, Suite # 14
Monmouth Junction, NJ 08852
Phone: 732-274-9500 Fax: 732-274-9510

File Name : 41-F
Site Code : F
Start Date : 5/6/2008
Page No : 3

	Garfield Avenue Southbound					Carteret Avenue Westbound					Garfield Avenue Northbound					Carteret Avenue Eastbound					
Start Time	Left	Thru	Right	Peds	App. Total	Left	Thru	Right	Peds	App. Total	Left	Thru	Right	Peds	App. Total	Left	Thru	Right	Peds	App. Total	Int. Total
Peak Hour Analysis From 07:45 AM to 08:30 AM - Peak 1 of 1																					
Peak Hour for Entire Intersection Begins at 07:45 AM																					
07:45 AM	5	96	8	0	109	1	2	1	0	4	2	179	4	0	185	6	20	3	0	29	327
08:00 AM	3	82	4	0	89	3	8	5	0	16	4	119	8	0	131	9	21	7	0	37	273
08:15 AM	1	95	3	0	99	4	4	2	0	10	1	126	5	0	132	1	16	10	0	27	268
08:30 AM	2	104	9	0	115	2	3	1	0	6	2	117	5	0	124	7	23	7	0	37	282
Total Volume	11	377	24	0	412	10	17	9	0	36	9	541	22	0	572	23	80	27	0	130	1150
% App. Total	2.7	91.5	5.8	0		27.8	47.2	25	0		1.6	94.6	3.8	0		17.7	61.5	20.8	0		
PHF	.550	.906	.667	.000	.896	.625	.531	.450	.000	.563	.563	.756	.688	.000	.773	.639	.870	.675	.000	.878	.879

TechniQuest Corporation

4105 US Route 1, Suite # 14
Monmouth Junction, NJ 08852
Phone: 732-274-9500 Fax: 732-274-9510

File Name : 41-F
Site Code : F
Start Date : 5/6/2008
Page No : 4

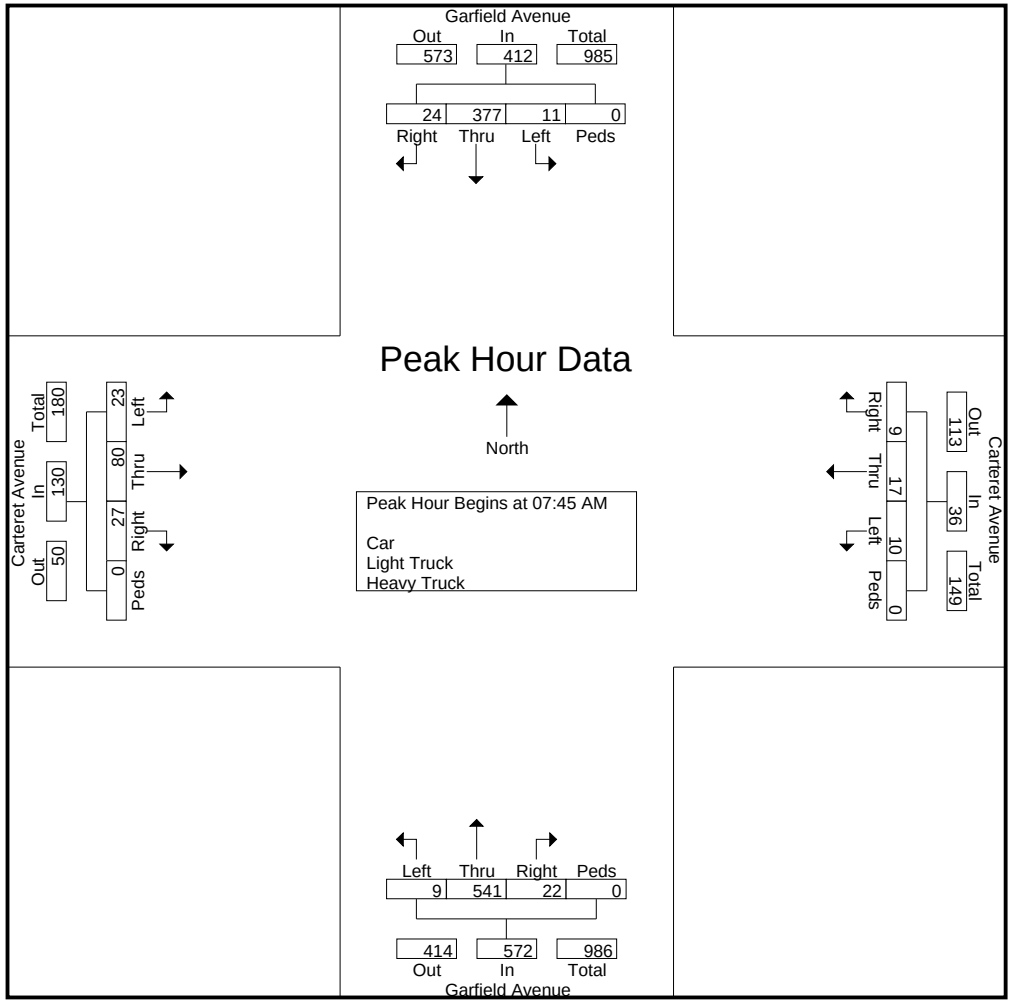

TechniQuest Corporation

4105 US Route 1, Suite # 14
Monmouth Junction, NJ 08852
Phone: 732-274-9500 Fax: 732-274-9510

File Name : 41-F
Site Code : F
Start Date : 5/6/2008
Page No : 5

	Garfield Avenue Southbound					Carteret Avenue Westbound					Garfield Avenue Northbound					Carteret Avenue Eastbound					
Start Time	Left	Thru	Right	Peds	App. Total	Left	Thru	Right	Peds	App. Total	Left	Thru	Right	Peds	App. Total	Left	Thru	Right	Peds	App. Total	Int. Total
Peak Hour Analysis From 05:00 PM to 05:45 PM - Peak 1 of 1																					
Peak Hour for Entire Intersection Begins at 05:00 PM																					
05:00 PM	2	78	6	0	86	9	5	7	0	21	7	151	11	0	169	3	12	4	0	19	295
05:15 PM	3	82	12	0	97	4	0	1	0	5	3	152	8	0	163	6	13	3	0	22	287
05:30 PM	1	68	7	0	76	1	1	0	0	2	1	173	2	0	176	4	16	6	0	26	280
05:45 PM	2	80	15	0	97	4	11	3	0	18	6	143	4	0	153	10	9	7	0	26	294
Total Volume	8	308	40	0	356	18	17	11	0	46	17	619	25	0	661	23	50	20	0	93	1156
% App. Total	2.2	86.5	11.2	0		39.1	37	23.9	0		2.6	93.6	3.8	0		24.7	53.8	21.5	0		
PHF	.667	.939	.667	.000	.918	.500	.386	.393	.000	.548	.607	.895	.568	.000	.939	.575	.781	.714	.000	.894	.980

TechniQuest Corporation

4105 US Route 1, Suite # 14
Monmouth Junction, NJ 08852
Phone: 732-274-9500 Fax: 732-274-9510

File Name : 41-F
Site Code : F
Start Date : 5/6/2008
Page No : 6

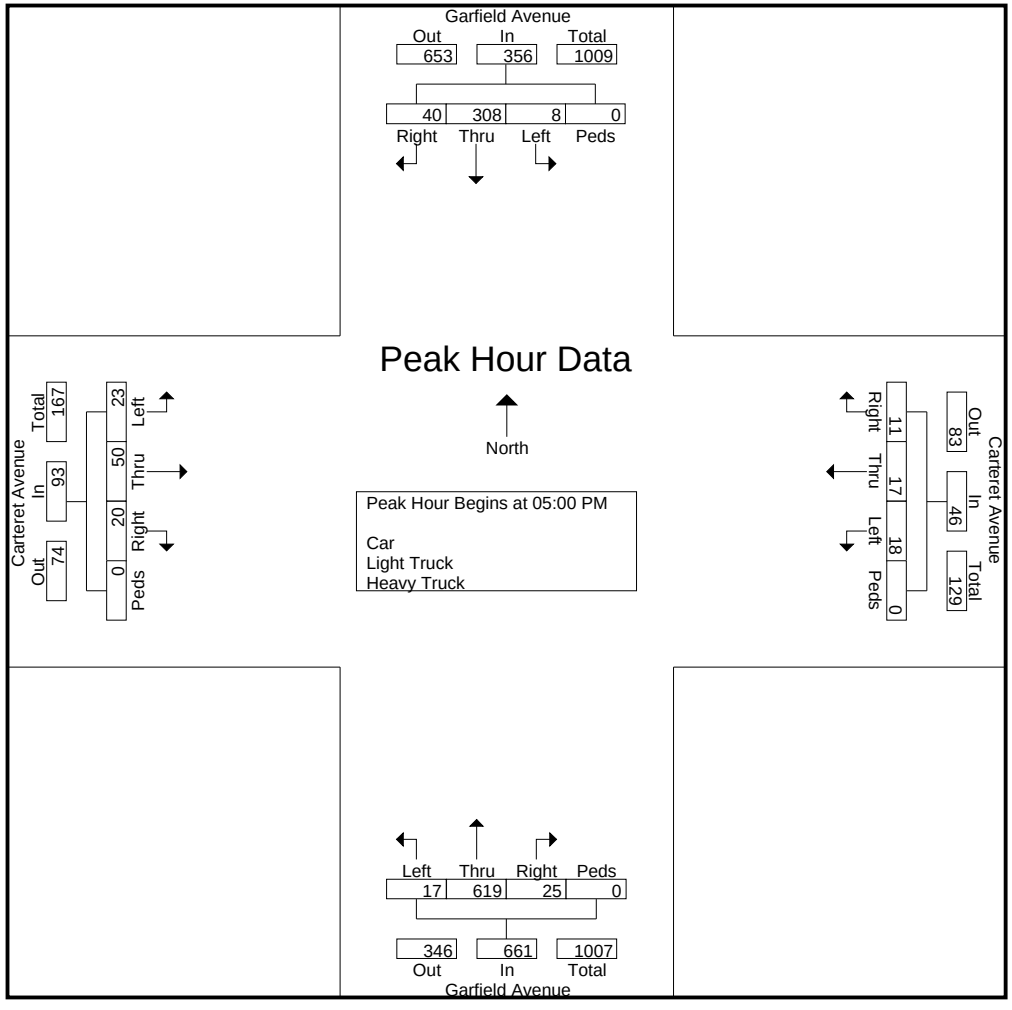

TechniQuest Corporation

4105 US Route 1, Suite # 14
Monmouth Junction, NJ 08852
Phone: 732-274-9500 Fax: 732-274-9510

File Name : 06-01-AM
Site Code : 1
Start Date : 5/13/2008
Page No : 1

Groups Printed- Car - Light Truck - Heavy Truck

	Palisade Avenue Southbound					Congress Street Westbound					Palisade Avenue Northbound					Congress Street Eastbound					
Start Time	Left	Thru	Right	Peds	App. Total	Left	Thru	Right	Peds	App. Total	Left	Thru	Right	Peds	App. Total	Left	Thru	Right	Peds	App. Total	Int. Total
06:30 AM	11	53	7	1	72	4	23	3	9	39	10	39	13	2	64	3	57	8	11	79	254
06:45 AM	11	56	9	1	77	8	20	2	11	41	10	44	15	1	70	4	55	10	18	87	275
Total	22	109	16	2	149	12	43	5	20	80	20	83	28	3	134	7	112	18	29	166	529
07:00 AM	16	62	10	7	95	7	24	7	23	61	22	40	12	4	78	6	57	16	21	100	334
07:15 AM	14	64	18	2	98	11	34	5	39	89	21	38	13	10	82	7	58	18	22	105	374
07:30 AM	14	60	16	2	92	8	47	9	43	107	18	50	13	7	88	6	63	18	32	119	406
07:45 AM	11	47	29	1	88	8	39	9	47	103	22	48	16	11	97	5	55	17	22	99	387
Total	55	233	73	12	373	34	144	30	152	360	83	176	54	32	345	24	233	69	97	423	1501
08:00 AM	12	54	26	1	93	9	39	7	38	93	30	43	8	5	86	14	59	16	44	133	405
08:15 AM	15	55	21	7	98	5	32	11	18	66	27	41	8	3	79	24	54	17	48	143	386
08:30 AM	15	59	25	2	101	8	38	7	19	72	25	50	14	12	101	8	51	18	26	103	377
08:45 AM	11	58	17	2	88	14	25	3	14	56	18	45	7	6	76	16	56	16	42	130	350
Total	53	226	89	12	380	36	134	28	89	287	100	179	37	26	342	62	220	67	160	509	1518
Grand Total	130	568	178	26	902	82	321	63	261	727	203	438	119	61	821	93	565	154	286	1098	3548
Apprch %	14.4	63	19.7	2.9		11.3	44.2	8.7	35.9		24.7	53.3	14.5	7.4		8.5	51.5	14	26		
Total %	3.7	16	5	0.7	25.4	2.3	9	1.8	7.4	20.5	5.7	12.3	3.4	1.7	23.1	2.6	15.9	4.3	8.1	30.9	
Car	121	523	176	26	846	62	300	57	261	680	192	327	86	61	666	93	555	149	286	1083	3275
% Car	93.1	92.1	98.9	100	93.8	75.6	93.5	90.5	100	93.5	94.6	74.7	72.3	100	81.1	100	98.2	96.8	100	98.6	92.3
Light Truck	9	39	2	0	50	20	17	4	0	41	11	104	32	0	147	0	9	5	0	14	252
% Light Truck	6.9	6.9	1.1	0	5.5	24.4	5.3	6.3	0	5.6	5.4	23.7	26.9	0	17.9	0	1.6	3.2	0	1.3	7.1
Heavy Truck	0	6	0	0	6	0	4	2	0	6	0	7	1	0	8	0	1	0	0	1	21
% Heavy Truck	0	1.1	0	0	0.7	0	1.2	3.2	0	0.8	0	1.6	0.8	0	1	0	0.2	0	0	0.1	0.6

TechniQuest Corporation

4105 US Route 1, Suite # 14
Monmouth Junction, NJ 08852
Phone: 732-274-9500 Fax: 732-274-9510

File Name : 06-01-AM
Site Code : 1
Start Date : 5/13/2008
Page No : 2

	Palisade Avenue Southbound					Congress Street Westbound					Palisade Avenue Northbound					Congress Street Eastbound					
Start Time	Left	Thru	Right	Peds	App. Total	Left	Thru	Right	Peds	App. Total	Left	Thru	Right	Peds	App. Total	Left	Thru	Right	Peds	App. Total	Int. Total
Peak Hour Analysis From 06:30 AM to 08:45 AM - Peak 1 of 1																					
Peak Hour for Entire Intersection Begins at 07:30 AM																					
07:30 AM	14	60	16	2	92	8	47	9	43	107	18	50	13	7	88	6	63	18	32	119	406
07:45 AM	11	47	29	1	88	8	39	9	47	103	22	48	16	11	97	5	55	17	22	99	387
08:00 AM	12	54	26	1	93	9	39	7	38	93	30	43	8	5	86	14	59	16	44	133	405
08:15 AM	15	55	21	7	98	5	32	11	18	66	27	41	8	3	79	24	54	17	48	143	386
Total Volume	52	216	92	11	371	30	157	36	146	369	97	182	45	26	350	49	231	68	146	494	1584
% App. Total	14	58.2	24.8	3		8.1	42.5	9.8	39.6		27.7	52	12.9	7.4		9.9	46.8	13.8	29.6		
PHF	.867	.900	.793	.393	.946	.833	.835	.818	.777	.862	.808	.910	.703	.591	.902	.510	.917	.944	.760	.864	.975

TechniQuest Corporation

4105 US Route 1, Suite # 14
Monmouth Junction, NJ 08852
Phone: 732-274-9500 Fax: 732-274-9510

File Name : 06-01-AM
Site Code : 1
Start Date : 5/13/2008
Page No : 3

Peak Hour Data

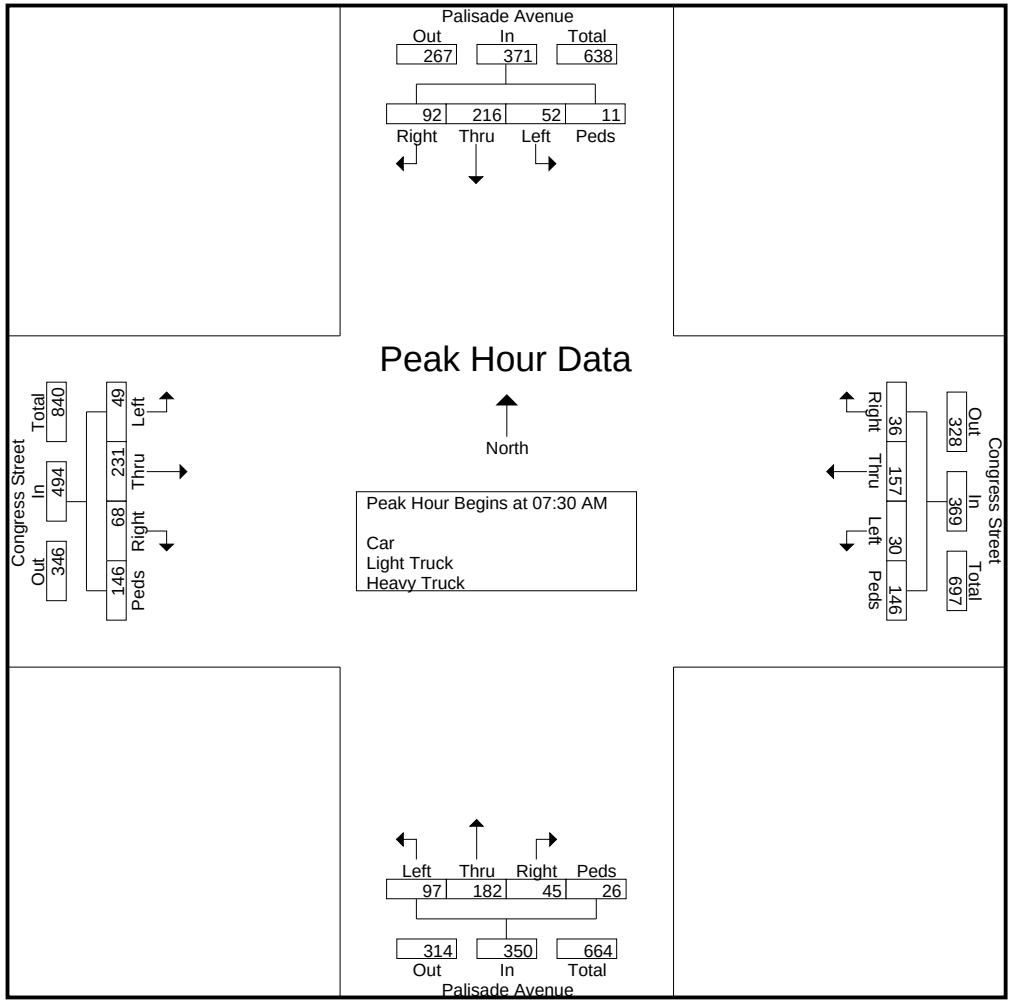

TechniQuest Corporation

4105 US Route 1, Suite # 14
Monmouth Junction, NJ 08852
Phone: 732-274-9500 Fax: 732-274-9510

File Name : 06-01-PM
Site Code : 1
Start Date : 5/13/2008
Page No : 1

Groups Printed- Car - Light Truck - Heavy Truck

	Palisade Avenue Southbound					Congress Street Westbound					Palisade Avenue Northbound					Congress Street Eastbound					
Start Time	Left	Thru	Right	Peds	App. Total	Left	Thru	Right	Peds	App. Total	Left	Thru	Right	Peds	App. Total	Left	Thru	Right	Peds	App. Total	Int. Total
04:00 PM	15	39	8	12	74	10	48	8	35	101	11	45	10	15	81	7	36	6	33	82	338
04:15 PM	17	54	9	15	95	7	54	6	30	97	13	56	10	6	85	12	41	9	40	102	379
04:30 PM	12	45	10	11	78	13	38	5	27	83	11	49	14	4	78	15	35	4	66	120	359
04:45 PM	6	56	7	9	78	13	48	9	26	96	9	49	11	7	76	7	36	2	37	82	332
Total	50	194	34	47	325	43	188	28	118	377	44	199	45	32	320	41	148	21	176	386	1408
05:00 PM	10	75	18	20	123	16	47	6	24	93	13	69	16	14	112	4	30	9	42	85	413
05:15 PM	10	87	7	13	117	18	42	10	20	90	9	59	13	14	95	4	48	4	72	128	430
05:30 PM	8	98	11	16	133	19	58	4	38	119	13	64	12	3	92	3	47	6	80	136	480
05:45 PM	14	50	3	7	74	24	62	9	35	130	12	45	13	4	74	4	43	9	68	124	402
Total	42	310	39	56	447	77	209	29	117	432	47	237	54	35	373	15	168	28	262	473	1725
06:00 PM	12	46	3	5	66	13	53	13	25	104	20	52	15	6	93	3	40	9	59	111	374
06:15 PM	15	38	2	6	61	18	63	11	29	121	14	54	11	5	84	2	36	7	55	100	366
Grand Total	119	588	78	114	899	151	513	81	289	1034	125	542	125	78	870	61	392	65	552	1070	3873
Apprch %	13.2	65.4	8.7	12.7		14.6	49.6	7.8	27.9		14.4	62.3	14.4	9		5.7	36.6	6.1	51.6		
Total %	3.1	15.2	2	2.9	23.2	3.9	13.2	2.1	7.5	26.7	3.2	14	3.2	2	22.5	1.6	10.1	1.7	14.3	27.6	
Car	106	488	60	113	767	126	499	76	289	990	114	421	99	78	712	49	378	59	552	1038	3507
% Car	89.1	83	76.9	99.1	85.3	83.4	97.3	93.8	100	95.7	91.2	77.7	79.2	100	81.8	80.3	96.4	90.8	100	97	90.5
Light Truck	13	100	18	1	132	24	13	4	0	41	11	119	26	0	156	12	14	5	0	31	360
% Light Truck	10.9	17	23.1	0.9	14.7	15.9	2.5	4.9	0	4	8.8	22	20.8	0	17.9	19.7	3.6	7.7	0	2.9	9.3
Heavy Truck	0	0	0	0	0	1	1	1	0	3	0	2	0	0	2	0	0	1	0	1	6
% Heavy Truck	0	0	0	0	0	0.7	0.2	1.2	0	0.3	0	0.4	0	0	0.2	0	0	1.5	0	0.1	0.2

TechniQuest Corporation

4105 US Route 1, Suite # 14
Monmouth Junction, NJ 08852
Phone: 732-274-9500 Fax: 732-274-9510

File Name : 06-01-PM
Site Code : 1
Start Date : 5/13/2008
Page No : 2

	Palisade Avenue Southbound					Congress Street Westbound					Palisade Avenue Northbound					Congress Street Eastbound					
Start Time	Left	Thru	Right	Peds	App. Total	Left	Thru	Right	Peds	App. Total	Left	Thru	Right	Peds	App. Total	Left	Thru	Right	Peds	App. Total	Int. Total
Peak Hour Analysis From 04:00 PM to 06:00 PM - Peak 1 of 1																					
Peak Hour for Entire Intersection Begins at 05:00 PM																					
05:00 PM	10	75	18	20	123	16	47	6	24	93	13	69	16	14	112	4	30	9	42	85	413
05:15 PM	10	87	7	13	117	18	42	10	20	90	9	59	13	14	95	4	48	4	72	128	430
05:30 PM	8	98	11	16	133	19	58	4	38	119	13	64	12	3	92	3	47	6	80	136	480
05:45 PM	14	50	3	7	74	24	62	9	35	130	12	45	13	4	74	4	43	9	68	124	402
Total Volume	42	310	39	56	447	77	209	29	117	432	47	237	54	35	373	15	168	28	262	473	1725
% App. Total	9.4	69.4	8.7	12.5		17.8	48.4	6.7	27.1		12.6	63.5	14.5	9.4		3.2	35.5	5.9	55.4		
PHF	.750	.791	.542	.700	.840	.802	.843	.725	.770	.831	.904	.859	.844	.625	.833	.938	.875	.778	.819	.869	.898

TechniQuest Corporation

4105 US Route 1, Suite # 14
Monmouth Junction, NJ 08852
Phone: 732-274-9500 Fax: 732-274-9510

File Name : 06-01-PM
Site Code : 1
Start Date : 5/13/2008
Page No : 3

Peak Hour Data

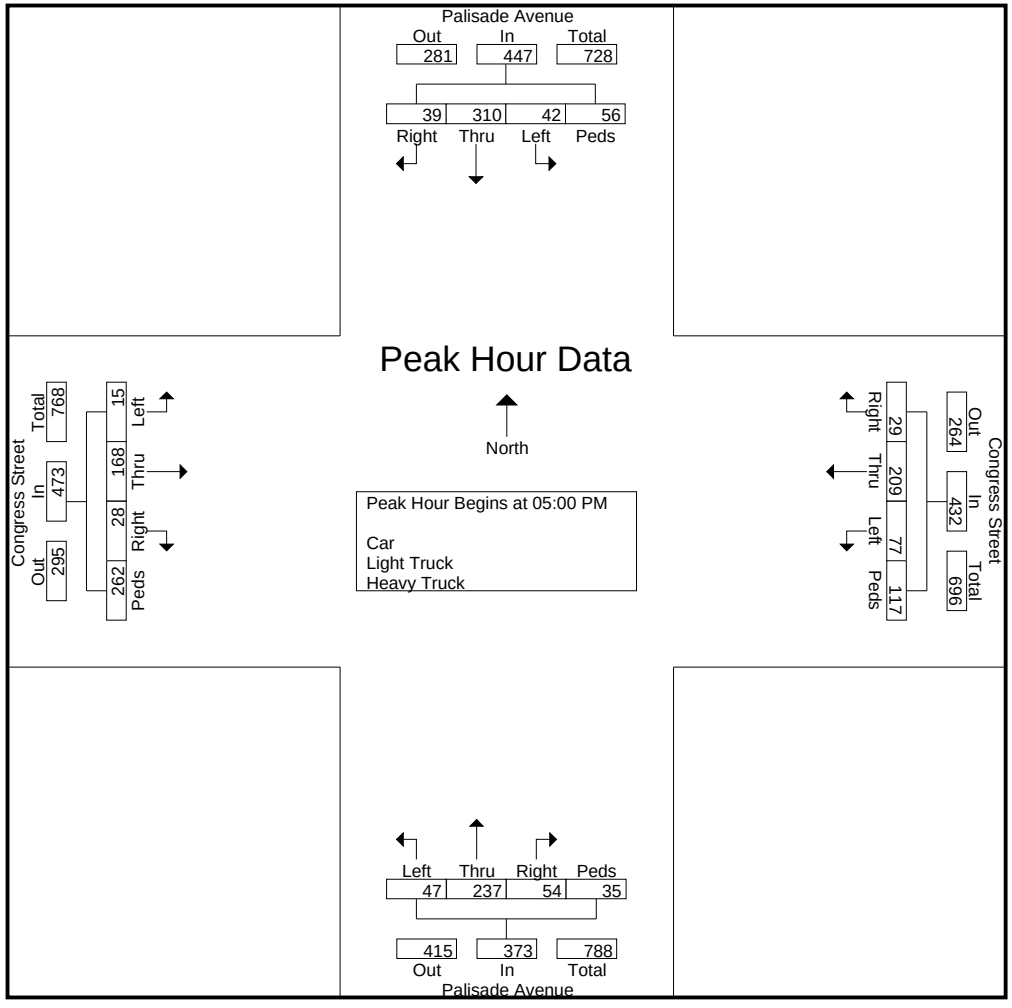

TechniQuest Corporation

4105 US Route 1, Suite # 14
Monmouth Junction, NJ 08852
Phone: 732-274-9500 Fax: 732-274-9510

File Name : 06-02-AM
Site Code : 2
Start Date : 5/13/2008
Page No : 1

Groups Printed- Car - Light Truck - Heavy Truck

	Central Avenue Southbound					Congress Street Westbound					Central Avenue Northbound					Congress Street Eastbound					
Start Time	Left	Thru	Right	Peds	App. Total	Left	Thru	Right	Peds	App. Total	Left	Thru	Right	Peds	App. Total	Left	Thru	Right	Peds	App. Total	Int. Total
06:30 AM	24	34	0	8	66	20	0	26	2	48	0	40	24	0	64	9	28	10	7	54	232
06:45 AM	30	42	0	7	79	18	0	25	2	45	0	40	32	0	72	8	20	13	2	43	239
Total	54	76	0	15	145	38	0	51	4	93	0	80	56	0	136	17	48	23	9	97	471
07:00 AM	17	42	0	7	66	22	0	30	11	63	0	33	47	0	80	3	22	13	4	42	251
07:15 AM	25	47	0	6	78	29	0	42	8	79	0	38	48	0	86	7	21	9	0	37	280
07:30 AM	28	52	0	4	84	25	0	42	13	80	0	35	50	0	85	9	26	4	1	40	289
07:45 AM	24	49	0	6	79	32	0	54	14	100	0	45	40	0	85	12	24	10	2	48	312
Total	94	190	0	23	307	108	0	168	46	322	0	151	185	0	336	31	93	36	7	167	1132
08:00 AM	21	54	0	8	83	30	0	50	18	98	0	46	55	0	101	7	25	14	12	58	340
08:15 AM	22	60	0	13	95	30	0	38	15	83	0	47	61	0	108	8	27	7	10	52	338
08:30 AM	27	53	0	8	88	29	0	49	17	95	0	56	33	0	89	9	27	14	9	59	331
08:45 AM	29	45	0	15	89	20	0	40	1	61	0	48	55	0	103	5	22	17	9	53	306
Total	99	212	0	44	355	109	0	177	51	337	0	197	204	0	401	29	101	52	40	222	1315
Grand Total	247	478	0	82	807	255	0	396	101	752	0	428	445	0	873	77	242	111	56	486	2918
Apprch %	30.6	59.2	0	10.2		33.9	0	52.7	13.4		0	49	51	0		15.8	49.8	22.8	11.5		
Total %	8.5	16.4	0	2.8	27.7	8.7	0	13.6	3.5	25.8	0	14.7	15.3	0	29.9	2.6	8.3	3.8	1.9	16.7	
Car	243	446	0	82	771	231	0	373	101	705	0	399	433	0	832	73	233	105	56	467	2775
% Car	98.4	93.3	0	100	95.5	90.6	0	94.2	100	93.8	0	93.2	97.3	0	95.3	94.8	96.3	94.6	100	96.1	95.1
Light Truck	4	30	0	0	34	19	0	18	0	37	0	21	7	0	28	4	9	6	0	19	118
% Light Truck	1.6	6.3	0	0	4.2	7.5	0	4.5	0	4.9	0	4.9	1.6	0	3.2	5.2	3.7	5.4	0	3.9	4
Heavy Truck	0	2	0	0	2	5	0	5	0	10	0	8	5	0	13	0	0	0	0	0	25
% Heavy Truck	0	0.4	0	0	0.2	2	0	1.3	0	1.3	0	1.9	1.1	0	1.5	0	0	0	0	0	0.9

TechniQuest Corporation

4105 US Route 1, Suite # 14
Monmouth Junction, NJ 08852
Phone: 732-274-9500 Fax: 732-274-9510

File Name : 06-02-AM
Site Code : 2
Start Date : 5/13/2008
Page No : 2

	Central Avenue Southbound					Congress Street Westbound					Central Avenue Northbound					Congress Street Eastbound					
Start Time	Left	Thru	Right	Peds	App. Total	Left	Thru	Right	Peds	App. Total	Left	Thru	Right	Peds	App. Total	Left	Thru	Right	Peds	App. Total	Int. Total
Peak Hour Analysis From 06:30 AM to 08:45 AM - Peak 1 of 1																					
Peak Hour for Entire Intersection Begins at 07:45 AM																					
07:45 AM	24	49	0	6	79	32	0	54	14	100	0	45	40	0	85	12	24	10	2	48	312
08:00 AM	21	54	0	8	83	30	0	50	18	98	0	46	55	0	101	7	25	14	12	58	340
08:15 AM	22	60	0	13	95	30	0	38	15	83	0	47	61	0	108	8	27	7	10	52	338
08:30 AM	27	53	0	8	88	29	0	49	17	95	0	56	33	0	89	9	27	14	9	59	331
Total Volume	94	216	0	35	345	121	0	191	64	376	0	194	189	0	383	36	103	45	33	217	1321
% App. Total	27.2	62.6	0	10.1		32.2	0	50.8	17		0	50.7	49.3	0		16.6	47.5	20.7	15.2		
PHF	.870	.900	.000	.673	.908	.945	.000	.884	.889	.940	.000	.866	.775	.000	.887	.750	.954	.804	.688	.919	.971

TechniQuest Corporation

4105 US Route 1, Suite # 14
Monmouth Junction, NJ 08852
Phone: 732-274-9500 Fax: 732-274-9510

File Name : 06-02-AM
Site Code : 2
Start Date : 5/13/2008
Page No : 3

Peak Hour Data

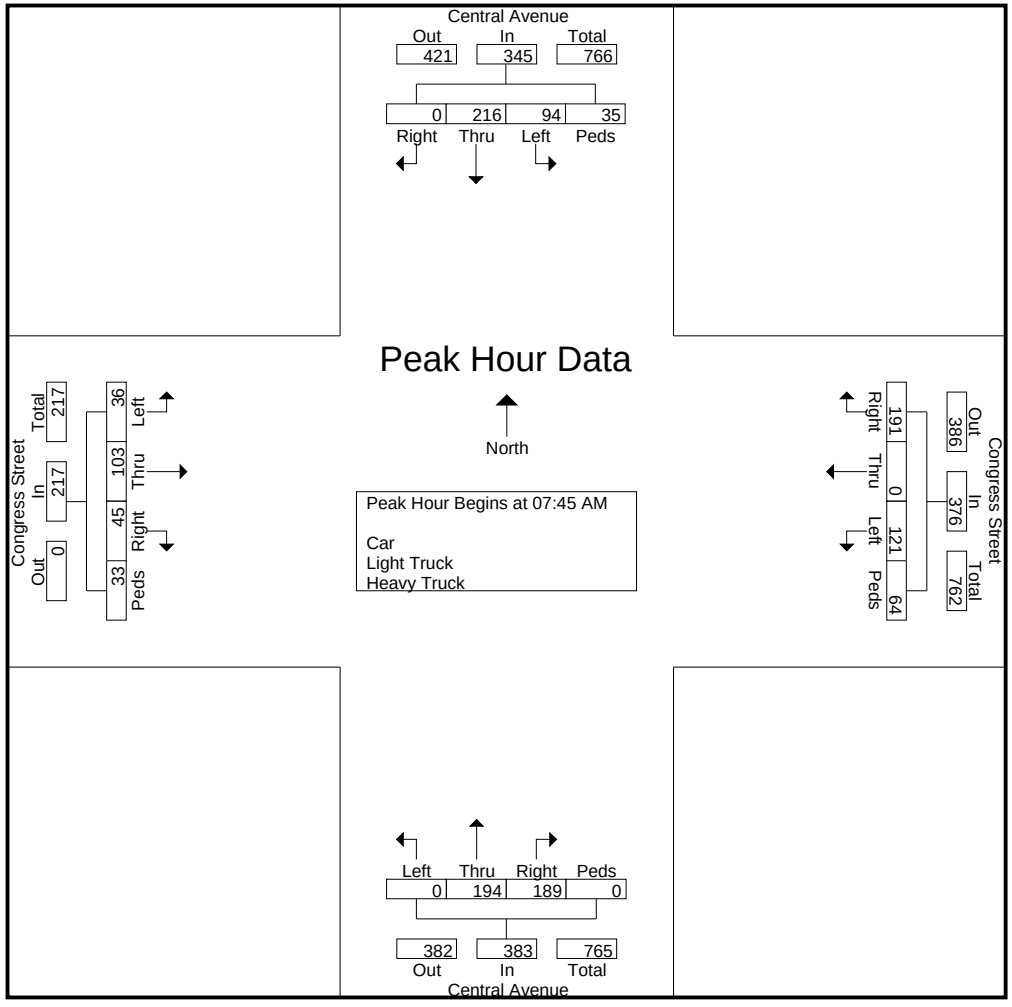

TechniQuest Corporation

4105 US Route 1, Suite # 14
Monmouth Junction, NJ 08852
Phone: 732-274-9500 Fax: 732-274-9510

File Name : 06-02-PM
Site Code : 2
Start Date : 5/13/2008
Page No : 1

Groups Printed- Car - Light Truck - Heavy Truck

	Central Avenue Southbound					Congress Street Westbound					Central Avenue Northbound					Congress Street Eastbound					
Start Time	Left	Thru	Right	Peds	App. Total	Left	Thru	Right	Peds	App. Total	Left	Thru	Right	Peds	App. Total	Left	Thru	Right	Peds	App. Total	Int. Total
04:00 PM	20	61	0	24	105	30	0	39	20	89	0	39	11	0	50	6	18	16	10	50	294
04:15 PM	10	60	0	30	100	34	0	38	4	76	0	56	29	0	85	5	24	20	5	54	315
04:30 PM	12	62	0	29	103	28	0	34	16	78	0	69	23	0	92	5	26	10	18	59	332
04:45 PM	7	56	0	44	107	19	0	46	12	77	0	60	14	0	74	6	25	11	10	52	310
Total	49	239	0	127	415	111	0	157	52	320	0	224	77	0	301	22	93	57	43	215	1251
05:00 PM	11	76	0	20	107	42	0	38	7	87	0	51	15	0	66	6	15	20	10	51	311
05:15 PM	13	77	0	31	121	16	0	46	4	66	0	60	11	0	71	5	23	14	17	59	317
05:30 PM	10	69	0	19	98	37	0	42	5	84	0	46	17	0	63	8	19	14	5	46	291
05:45 PM	13	42	0	32	87	35	0	44	9	88	0	52	29	0	81	10	14	12	15	51	307
Total	47	264	0	102	413	130	0	170	25	325	0	209	72	0	281	29	71	60	47	207	1226
06:00 PM	12	57	0	28	97	32	0	43	8	83	0	58	8	0	66	11	33	18	6	68	314
06:15 PM	7	63	0	27	97	25	0	53	6	84	0	62	19	0	81	2	16	12	7	37	299
Grand Total	115	623	0	284	1022	298	0	423	91	812	0	553	176	0	729	64	213	147	103	527	3090
Apprch %	11.3	61	0	27.8		36.7	0	52.1	11.2		0	75.9	24.1	0		12.1	40.4	27.9	19.5		
Total %	3.7	20.2	0	9.2	33.1	9.6	0	13.7	2.9	26.3	0	17.9	5.7	0	23.6	2.1	6.9	4.8	3.3	17.1	
Car	110	589	0	284	983	282	0	413	91	786	0	539	169	0	708	63	205	146	103	517	2994
% Car	95.7	94.5	0	100	96.2	94.6	0	97.6	100	96.8	0	97.5	96	0	97.1	98.4	96.2	99.3	100	98.1	96.9
Light Truck	5	33	0	0	38	10	0	5	0	15	0	14	3	0	17	1	8	1	0	10	80
% Light Truck	4.3	5.3	0	0	3.7	3.4	0	1.2	0	1.8	0	2.5	1.7	0	2.3	1.6	3.8	0.7	0	1.9	2.6
Heavy Truck	0	1	0	0	1	6	0	5	0	11	0	0	4	0	4	0	0	0	0	0	16
% Heavy Truck	0	0.2	0	0	0.1	2	0	1.2	0	1.4	0	0	2.3	0	0.5	0	0	0	0	0	0.5

TechniQuest Corporation

4105 US Route 1, Suite # 14
Monmouth Junction, NJ 08852
Phone: 732-274-9500 Fax: 732-274-9510

File Name : 06-02-PM
Site Code : 2
Start Date : 5/13/2008
Page No : 2

	Central Avenue Southbound					Congress Street Westbound					Central Avenue Northbound					Congress Street Eastbound					
Start Time	Left	Thru	Right	Peds	App. Total	Left	Thru	Right	Peds	App. Total	Left	Thru	Right	Peds	App. Total	Left	Thru	Right	Peds	App. Total	Int. Total
Peak Hour Analysis From 04:00 PM to 06:15 PM - Peak 1 of 1																					
Peak Hour for Entire Intersection Begins at 04:30 PM																					
04:30 PM	12	62	0	29	103	28	0	34	16	78	0	69	23	0	92	5	26	10	18	59	332
04:45 PM	7	56	0	44	107	19	0	46	12	77	0	60	14	0	74	6	25	11	10	52	310
05:00 PM	11	76	0	20	107	42	0	38	7	87	0	51	15	0	66	6	15	20	10	51	311
05:15 PM	13	77	0	31	121	16	0	46	4	66	0	60	11	0	71	5	23	14	17	59	317
Total Volume	43	271	0	124	438	105	0	164	39	308	0	240	63	0	303	22	89	55	55	221	1270
% App. Total	9.8	61.9	0	28.3		34.1	0	53.2	12.7		0	79.2	20.8	0		10	40.3	24.9	24.9		
PHF	.827	.880	.000	.705	.905	.625	.000	.891	.609	.885	.000	.870	.685	.000	.823	.917	.856	.688	.764	.936	.956

TechniQuest Corporation

4105 US Route 1, Suite # 14
Monmouth Junction, NJ 08852
Phone: 732-274-9500 Fax: 732-274-9510

File Name : 06-02-PM
Site Code : 2
Start Date : 5/13/2008
Page No : 3

Peak Hour Data

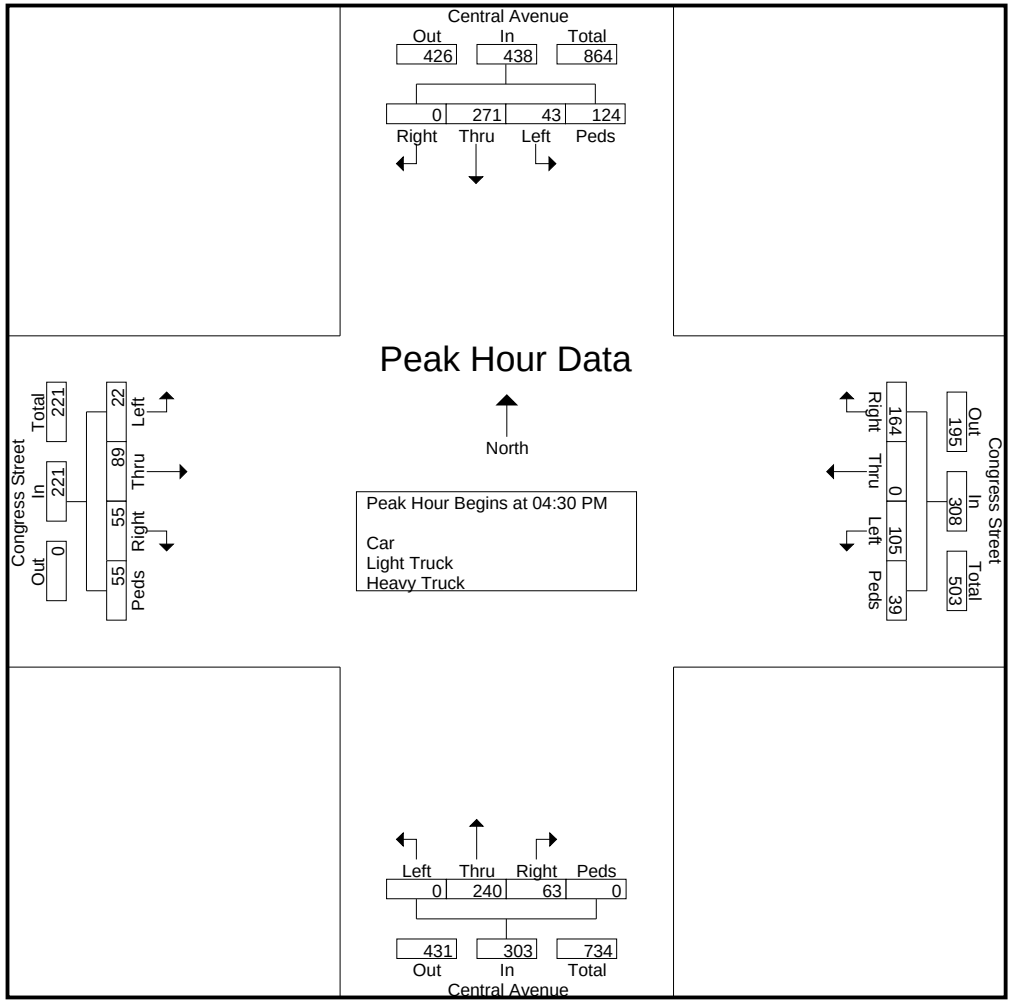

TechniQuest Corporation

4105 US Route 1, Suite # 14
Monmouth Junction, NJ 08852
Phone: 732-274-9500 Fax: 732-274-9510

File Name : 06-03-AM
Site Code : 3
Start Date : 5/13/2008
Page No : 1

Groups Printed- Car - Light Truck - Heavy Truck

	Central Avenue Southbound					Bowers Street Westbound					Central Avenue Northbound					Bowers Street Eastbound					
Start Time	Left	Thru	Right	Peds	App. Total	Left	Thru	Right	Peds	App. Total	Left	Thru	Right	Peds	App. Total	Left	Thru	Right	Peds	App. Total	Int. Total
06:30 AM	0	63	1	3	67	7	2	10	2	21	2	50	0	10	62	4	0	4	2	10	160
06:45 AM	0	73	0	4	77	8	3	12	1	24	1	57	0	8	66	3	0	7	1	11	178
Total	0	136	1	7	144	15	5	22	3	45	3	107	0	18	128	7	0	11	3	21	338
07:00 AM	0	77	1	3	81	11	6	14	4	35	1	60	0	11	72	6	0	7	7	20	208
07:15 AM	0	72	2	9	83	11	10	23	6	50	0	56	0	15	71	7	0	11	19	37	241
07:30 AM	0	78	6	4	88	18	11	14	2	45	4	62	0	12	78	9	0	10	11	30	241
07:45 AM	0	92	1	3	96	16	17	17	2	52	4	57	0	22	83	11	0	11	9	31	262
Total	0	319	10	19	348	56	44	68	14	182	9	235	0	60	304	33	0	39	46	118	952
08:00 AM	0	98	2	4	104	13	19	25	0	57	3	60	0	22	85	16	0	12	18	46	292
08:15 AM	0	93	3	1	97	9	21	25	0	55	5	76	0	49	130	7	0	9	19	35	317
08:30 AM	0	95	2	2	99	10	23	23	0	56	7	54	0	33	94	11	0	12	9	32	281
08:45 AM	0	85	0	1	86	12	15	25	0	52	2	59	0	24	85	16	0	11	9	36	259
Total	0	371	7	8	386	44	78	98	0	220	17	249	0	128	394	50	0	44	55	149	1149
Grand Total	0	826	18	34	878	115	127	188	17	447	29	591	0	206	826	90	0	94	104	288	2439
Apprch %	0	94.1	2.1	3.9		25.7	28.4	42.1	3.8		3.5	71.5	0	24.9		31.2	0	32.6	36.1		
Total %	0	33.9	0.7	1.4	36	4.7	5.2	7.7	0.7	18.3	1.2	24.2	0	8.4	33.9	3.7	0	3.9	4.3	11.8	
Car	0	793	18	34	845	110	121	181	17	429	27	556	0	206	789	89	0	90	104	283	2346
% Car	0	96	100	100	96.2	95.7	95.3	96.3	100	96	93.1	94.1	0	100	95.5	98.9	0	95.7	100	98.3	96.2
Light Truck	0	29	0	0	29	5	6	6	0	17	1	30	0	0	31	1	0	2	0	3	80
% Light Truck	0	3.5	0	0	3.3	4.3	4.7	3.2	0	3.8	3.4	5.1	0	0	3.8	1.1	0	2.1	0	1	3.3
Heavy Truck	0	4	0	0	4	0	0	1	0	1	1	5	0	0	6	0	0	2	0	2	13
% Heavy Truck	0	0.5	0	0	0.5	0	0	0.5	0	0.2	3.4	0.8	0	0	0.7	0	0	2.1	0	0.7	0.5

TechniQuest Corporation

4105 US Route 1, Suite # 14
Monmouth Junction, NJ 08852
Phone: 732-274-9500 Fax: 732-274-9510

File Name : 06-03-AM
Site Code : 3
Start Date : 5/13/2008
Page No : 2

	Central Avenue Southbound					Bowers Street Westbound					Central Avenue Northbound					Bowers Street Eastbound					
Start Time	Left	Thru	Right	Peds	App. Total	Left	Thru	Right	Peds	App. Total	Left	Thru	Right	Peds	App. Total	Left	Thru	Right	Peds	App. Total	Int. Total
Peak Hour Analysis From 06:30 AM to 08:45 AM - Peak 1 of 1																					
Peak Hour for Entire Intersection Begins at 07:45 AM																					
07:45 AM	0	92	1	3	96	16	17	17	2	52	4	57	0	22	83	11	0	11	9	31	262
08:00 AM	0	98	2	4	104	13	19	25	0	57	3	60	0	22	85	16	0	12	18	46	292
08:15 AM	0	93	3	1	97	9	21	25	0	55	5	76	0	49	130	7	0	9	19	35	317
08:30 AM	0	95	2	2	99	10	23	23	0	56	7	54	0	33	94	11	0	12	9	32	281
Total Volume	0	378	8	10	396	48	80	90	2	220	19	247	0	126	392	45	0	44	55	144	1152
% App. Total	0	95.5	2	2.5		21.8	36.4	40.9	0.9		4.8	63	0	32.1		31.2	0	30.6	38.2		
PHF	.000	.964	.667	.625	.952	.750	.870	.900	.250	.965	.679	.813	.000	.643	.754	.703	.000	.917	.724	.783	.909

TechniQuest Corporation

4105 US Route 1, Suite # 14
Monmouth Junction, NJ 08852
Phone: 732-274-9500 Fax: 732-274-9510

File Name : 06-03-AM
Site Code : 3
Start Date : 5/13/2008
Page No : 3

Peak Hour Data

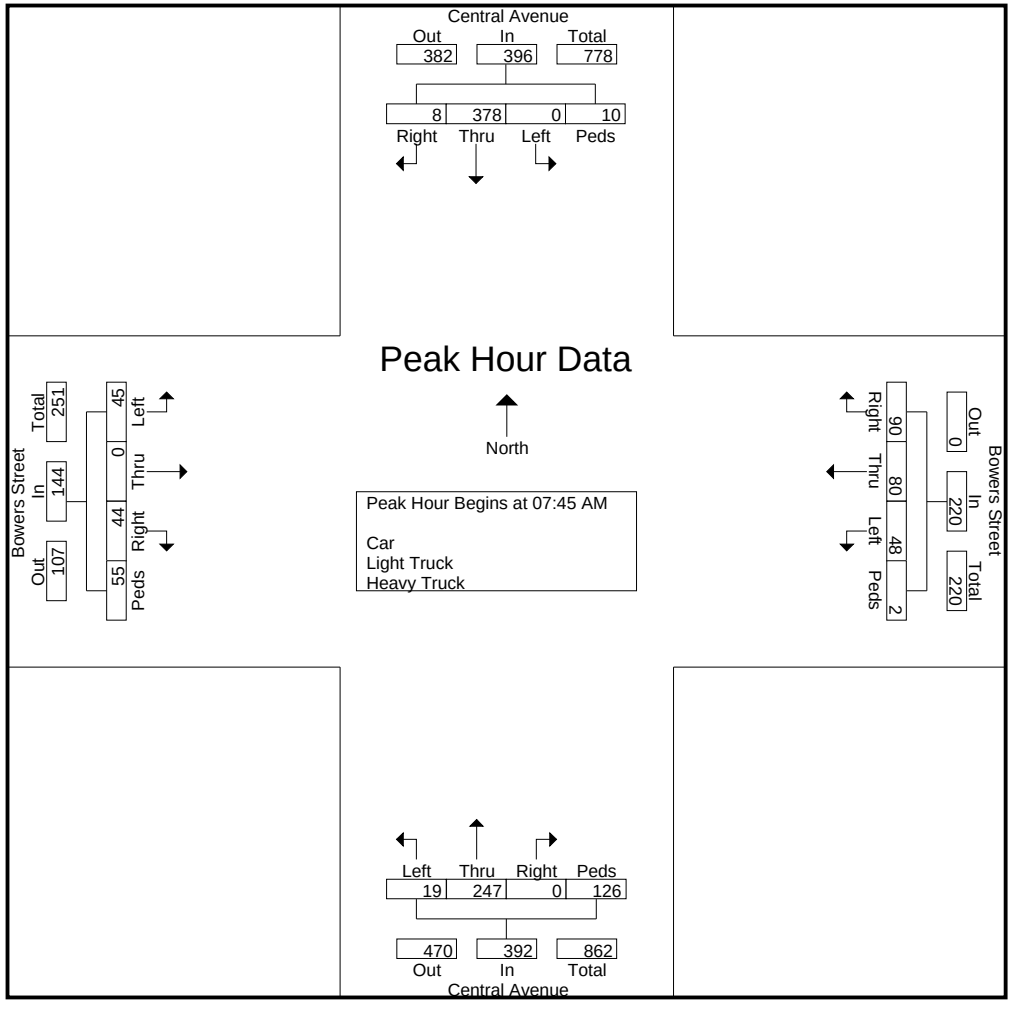

TechniQuest Corporation

4105 US Route 1, Suite # 14
Monmouth Junction, NJ 08852
Phone: 732-274-9500 Fax: 732-274-9510

File Name : 06-03-PM
Site Code : 3
Start Date : 5/13/2008
Page No : 1

Groups Printed- Car - Light Truck - Heavy Truck

	Central Avenue Southbound					Bowers Street Westbound					Central Avenue Northbound					Bowers Street Eastbound					
Start Time	Left	Thru	Right	Peds	App. Total	Left	Thru	Right	Peds	App. Total	Left	Thru	Right	Peds	App. Total	Left	Thru	Right	Peds	App. Total	Int. Total
04:00 PM	0	105	3	10	118	17	13	13	4	47	4	30	0	9	43	8	0	7	7	22	230
04:15 PM	0	111	4	11	126	20	18	19	5	62	5	40	0	15	60	21	0	4	6	31	279
04:30 PM	0	89	5	19	113	23	24	25	6	78	1	52	0	31	84	16	0	1	9	26	301
04:45 PM	0	78	8	16	102	18	21	25	7	71	2	31	0	18	51	19	0	4	13	36	260
Total	0	383	20	56	459	78	76	82	22	258	12	153	0	73	238	64	0	16	35	115	1070
05:00 PM	0	128	2	30	160	16	19	29	10	74	6	28	0	17	51	12	0	8	3	23	308
05:15 PM	0	105	4	24	133	18	12	23	7	60	1	44	0	19	64	6	0	7	3	16	273
05:30 PM	0	113	3	18	134	19	12	23	1	55	5	36	0	14	55	8	0	5	3	16	260
05:45 PM	0	82	2	10	94	17	9	29	5	60	1	46	0	8	55	8	0	7	8	23	232
Total	0	428	11	82	521	70	52	104	23	249	13	154	0	58	225	34	0	27	17	78	1073
06:00 PM	0	100	4	18	122	24	8	30	4	66	1	27	0	6	34	13	0	16	10	39	261
06:15 PM	0	95	2	27	124	16	18	25	4	63	5	55	0	27	87	4	0	2	5	11	285
Grand Total	0	1006	37	183	1226	188	154	241	53	636	31	389	0	164	584	115	0	61	67	243	2689
Apprch %	0	82.1	3	14.9		29.6	24.2	37.9	8.3		5.3	66.6	0	28.1		47.3	0	25.1	27.6		
Total %	0	37.4	1.4	6.8	45.6	7	5.7	9	2	23.7	1.2	14.5	0	6.1	21.7	4.3	0	2.3	2.5	9	
Car	0	985	37	183	1205	179	151	237	53	620	30	365	0	164	559	114	0	60	67	241	2625
% Car	0	97.9	100	100	98.3	95.2	98.1	98.3	100	97.5	96.8	93.8	0	100	95.7	99.1	0	98.4	100	99.2	97.6
Light Truck	0	20	0	0	20	9	3	4	0	16	1	24	0	0	25	1	0	1	0	2	63
% Light Truck	0	2	0	0	1.6	4.8	1.9	1.7	0	2.5	3.2	6.2	0	0	4.3	0.9	0	1.6	0	0.8	2.3
Heavy Truck	0	1	0	0	1	0	0	0	0	0	0	0	0	0	0	0	0	0	0	0	1
% Heavy Truck	0	0.1	0	0	0.1	0	0	0	0	0	0	0	0	0	0	0	0	0	0	0	0

TechniQuest Corporation

4105 US Route 1, Suite # 14
Monmouth Junction, NJ 08852
Phone: 732-274-9500 Fax: 732-274-9510

File Name : 06-03-PM
Site Code : 3
Start Date : 5/13/2008
Page No : 2

	Central Avenue Southbound					Bowers Street Westbound					Central Avenue Northbound					Bowers Street Eastbound					
Start Time	Left	Thru	Right	Peds	App. Total	Left	Thru	Right	Peds	App. Total	Left	Thru	Right	Peds	App. Total	Left	Thru	Right	Peds	App. Total	Int. Total
Peak Hour Analysis From 04:00 PM to 06:15 PM - Peak 1 of 1																					
Peak Hour for Entire Intersection Begins at 04:15 PM																					
04:15 PM	0	111	4	11	126	20	18	19	5	62	5	40	0	15	60	21	0	4	6	31	279
04:30 PM	0	89	5	19	113	23	24	25	6	78	1	52	0	31	84	16	0	1	9	26	301
04:45 PM	0	78	8	16	102	18	21	25	7	71	2	31	0	18	51	19	0	4	13	36	260
05:00 PM	0	128	2	30	160	16	19	29	10	74	6	28	0	17	51	12	0	8	3	23	308
Total Volume	0	406	19	76	501	77	82	98	28	285	14	151	0	81	246	68	0	17	31	116	1148
% App. Total	0	81	3.8	15.2		27	28.8	34.4	9.8		5.7	61.4	0	32.9		58.6	0	14.7	26.7		
PHF	.000	.793	.594	.633	.783	.837	.854	.845	.700	.913	.583	.726	.000	.653	.732	.810	.000	.531	.596	.806	.932

TechniQuest Corporation

4105 US Route 1, Suite # 14
Monmouth Junction, NJ 08852
Phone: 732-274-9500 Fax: 732-274-9510

File Name : 06-03-PM
Site Code : 3
Start Date : 5/13/2008
Page No : 3

Peak Hour Data

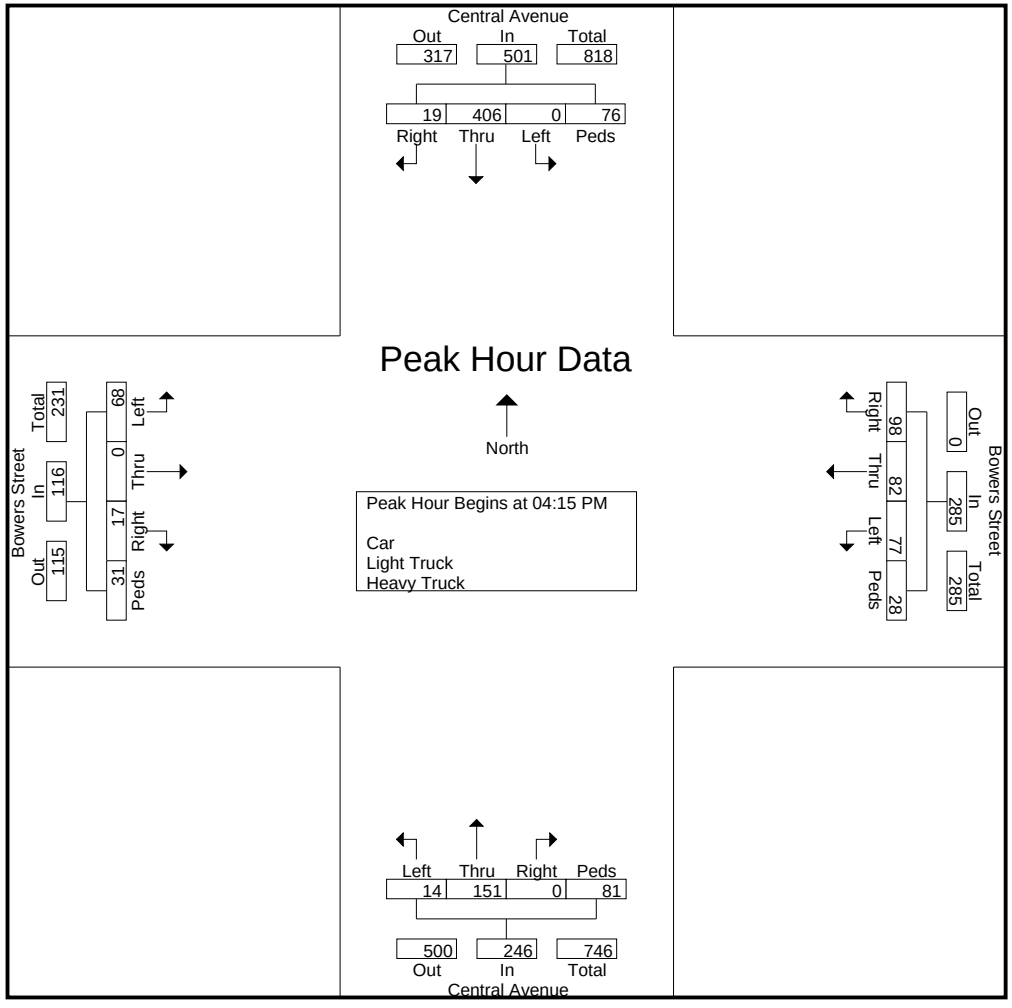

TechniQuest Corporation

4105 US Route 1, Suite # 14
Monmouth Junction, NJ 08852
Phone: 732-274-9500 Fax: 732-274-9510

File Name : 06-04-AM
Site Code : 4
Start Date : 5/14/2008
Page No : 1

Groups Printed- Car - Light Truck - Heavy Truck

	West Side Avenue Southbound					Danforth Avenue Westbound					West Side Avenue Northbound					Danforth Avenue Eastbound					
Start Time	Left	Thru	Right	Peds	App. Total	Left	Thru	Right	Peds	App. Total	Left	Thru	Right	Peds	App. Total	Left	Thru	Right	Peds	App. Total	Int. Total
06:30 AM	12	0	17	1	30	0	57	18	0	75	0	0	0	0	0	10	25	0	0	35	140
06:45 AM	17	0	19	0	36	0	46	24	0	70	0	0	0	0	0	12	36	0	1	49	155
Total	29	0	36	1	66	0	103	42	0	145	0	0	0	0	0	22	61	0	1	84	295
07:00 AM	23	0	20	1	44	0	45	23	1	69	0	0	0	0	0	15	38	0	0	53	166
07:15 AM	21	0	25	0	46	0	40	21	0	61	0	0	0	0	0	21	44	0	1	66	173
07:30 AM	50	0	22	0	72	0	35	19	0	54	0	0	0	0	0	13	33	0	0	46	172
07:45 AM	59	0	25	0	84	0	38	24	1	63	0	0	0	0	0	17	41	0	0	58	205
Total	153	0	92	1	246	0	158	87	2	247	0	0	0	0	0	66	156	0	1	223	716
08:00 AM	42	0	37	0	79	0	49	26	0	75	0	0	0	0	0	16	38	0	1	55	209
08:15 AM	56	0	24	0	80	0	59	31	0	90	0	0	0	0	0	18	49	0	0	67	237
08:30 AM	33	0	28	1	62	0	64	27	1	92	0	0	0	0	0	18	41	0	0	59	213
08:45 AM	28	0	32	0	60	0	52	31	0	83	0	0	0	0	0	19	52	0	0	71	214
Total	159	0	121	1	281	0	224	115	1	340	0	0	0	0	0	71	180	0	1	252	873
Grand Total	341	0	249	3	593	0	485	244	3	732	0	0	0	0	0	159	397	0	3	559	1884
Apprch %	57.5	0	42	0.5		0	66.3	33.3	0.4		0	0	0	0		28.4	71	0	0.5		
Total %	18.1	0	13.2	0.2	31.5	0	25.7	13	0.2	38.9	0	0	0	0	0	8.4	21.1	0	0.2	29.7	
Car	331	0	223	3	557	0	477	217	3	697	0	0	0	0	0	122	384	0	3	509	1763
% Car	97.1	0	89.6	100	93.9	0	98.4	88.9	100	95.2	0	0	0	0	0	76.7	96.7	0	100	91.1	93.6
Light Truck	7	0	21	0	28	0	2	22	0	24	0	0	0	0	0	36	6	0	0	42	94
% Light Truck	2.1	0	8.4	0	4.7	0	0.4	9	0	3.3	0	0	0	0	0	22.6	1.5	0	0	7.5	5
Heavy Truck	3	0	5	0	8	0	6	5	0	11	0	0	0	0	0	1	7	0	0	8	27
% Heavy Truck	0.9	0	2	0	1.3	0	1.2	2	0	1.5	0	0	0	0	0	0.6	1.8	0	0	1.4	1.4

TechniQuest Corporation

4105 US Route 1, Suite # 14
Monmouth Junction, NJ 08852
Phone: 732-274-9500 Fax: 732-274-9510

File Name : 06-04-AM
Site Code : 4
Start Date : 5/14/2008
Page No : 2

	West Side Avenue Southbound					Danforth Avenue Westbound					West Side Avenue Northbound					Danforth Avenue Eastbound					
Start Time	Left	Thru	Right	Peds	App. Total	Left	Thru	Right	Peds	App. Total	Left	Thru	Right	Peds	App. Total	Left	Thru	Right	Peds	App. Total	Int. Total
Peak Hour Analysis From 06:30 AM to 08:45 AM - Peak 1 of 1																					
Peak Hour for Entire Intersection Begins at 08:00 AM																					
08:00 AM	42	0	37	0	79	0	49	26	0	75	0	0	0	0	0	16	38	0	1	55	209
08:15 AM	56	0	24	0	80	0	59	31	0	90	0	0	0	0	0	18	49	0	0	67	237
08:30 AM	33	0	28	1	62	0	64	27	1	92	0	0	0	0	0	18	41	0	0	59	213
08:45 AM	28	0	32	0	60	0	52	31	0	83	0	0	0	0	0	19	52	0	0	71	214
Total Volume	159	0	121	1	281	0	224	115	1	340	0	0	0	0	0	71	180	0	1	252	873
% App. Total	56.6	0	43.1	0.4		0	65.9	33.8	0.3		0	0	0	0		28.2	71.4	0	0.4		
PHF	.710	.000	.818	.250	.878	.000	.875	.927	.250	.924	.000	.000	.000	.000	.000	.934	.865	.000	.250	.887	.921

TechniQuest Corporation

4105 US Route 1, Suite # 14
Monmouth Junction, NJ 08852
Phone: 732-274-9500 Fax: 732-274-9510

File Name : 06-04-AM
Site Code : 4
Start Date : 5/14/2008
Page No : 3

Peak Hour Data

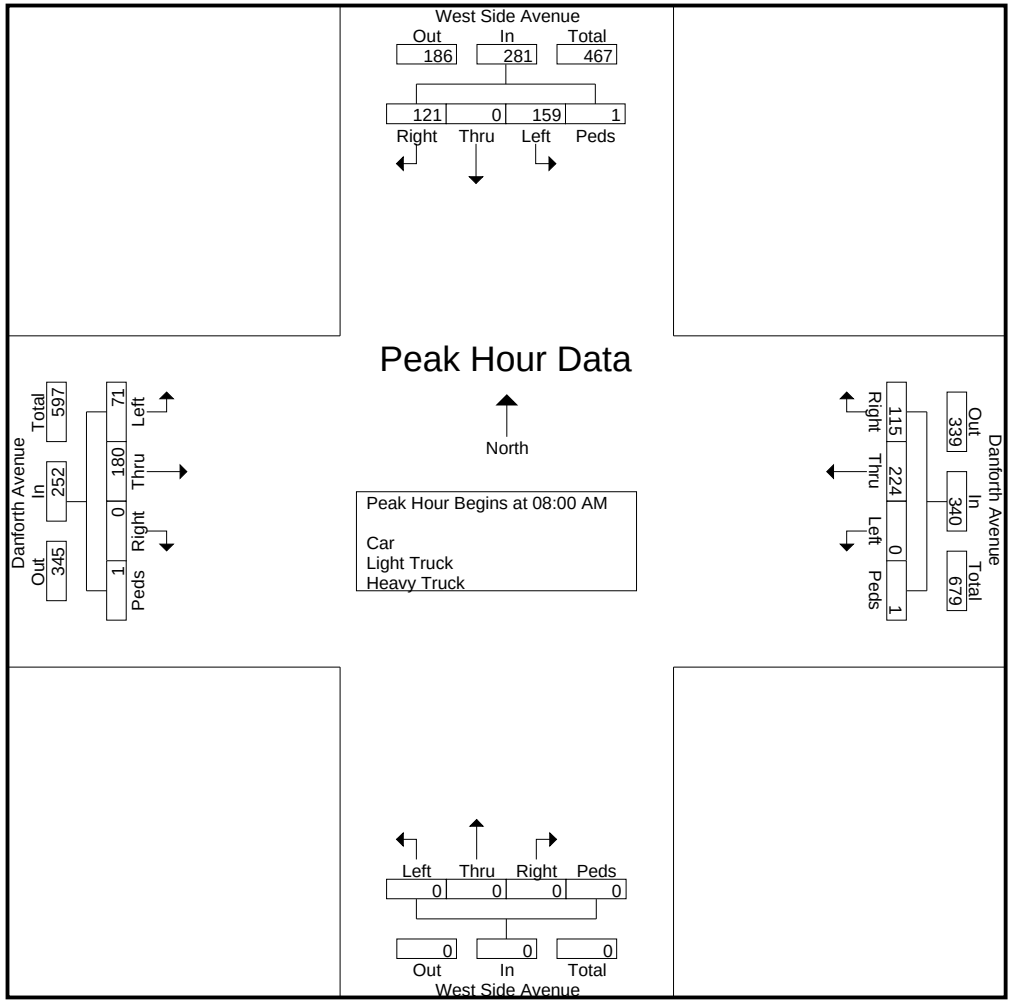

TechniQuest Corporation

4105 US Route 1, Suite # 14
Monmouth Junction, NJ 08852
Phone: 732-274-9500 Fax: 732-274-9510

File Name : 06-04-PM
Site Code : 4
Start Date : 5/14/2008
Page No : 1

Groups Printed- Car - Light Truck - Heavy Truck

	West Side Avenue Southbound					Danforth Avenue Westbound					West Side Avenue Northbound					Danforth Avenue Eastbound					
Start Time	Left	Thru	Right	Peds	App. Total	Left	Thru	Right	Peds	App. Total	Left	Thru	Right	Peds	App. Total	Left	Thru	Right	Peds	App. Total	Int. Total
04:00 PM	76	0	44	0	120	0	44	23	0	67	0	0	0	0	0	24	74	0	1	99	286
04:15 PM	69	0	37	0	106	0	47	36	1	84	0	0	0	0	0	32	74	0	0	106	296
04:30 PM	81	0	28	1	110	0	64	17	0	81	0	0	0	0	0	39	79	0	1	119	310
04:45 PM	92	0	29	0	121	0	57	29	0	86	0	0	0	0	0	36	64	0	0	100	307
Total	318	0	138	1	457	0	212	105	1	318	0	0	0	0	0	131	291	0	2	424	1199
05:00 PM	76	0	33	0	109	0	40	25	2	67	0	0	0	0	0	32	47	0	0	79	255
05:15 PM	94	0	40	1	135	0	36	23	0	59	0	0	0	0	0	25	70	0	2	97	291
05:30 PM	76	0	44	0	120	0	71	33	0	104	0	0	0	0	0	33	64	0	0	97	321
05:45 PM	98	0	40	2	140	0	77	28	1	106	0	0	0	0	0	36	78	0	0	114	360
Total	344	0	157	3	504	0	224	109	3	336	0	0	0	0	0	126	259	0	2	387	1227
06:00 PM	79	0	37	0	116	0	87	27	0	114	0	0	0	0	0	56	87	0	0	143	373
06:15 PM	84	0	43	1	128	0	86	31	1	118	0	0	0	0	0	41	85	0	2	128	374
Grand Total	825	0	375	5	1205	0	609	272	5	886	0	0	0	0	0	354	722	0	6	1082	3173
Apprch %	68.5	0	31.1	0.4		0	68.7	30.7	0.6		0	0	0	0		32.7	66.7	0	0.6		
Total %	26	0	11.8	0.2	38	0	19.2	8.6	0.2	27.9	0	0	0	0	0	11.2	22.8	0	0.2	34.1	
Car	807	0	357	5	1169	0	601	265	5	871	0	0	0	0	0	328	715	0	6	1049	3089
% Car	97.8	0	95.2	100	97	0	98.7	97.4	100	98.3	0	0	0	0	0	92.7	99	0	100	97	97.4
Light Truck	16	0	18	0	34	0	5	6	0	11	0	0	0	0	0	26	2	0	0	28	73
% Light Truck	1.9	0	4.8	0	2.8	0	0.8	2.2	0	1.2	0	0	0	0	0	7.3	0.3	0	0	2.6	2.3
Heavy Truck	2	0	0	0	2	0	3	1	0	4	0	0	0	0	0	0	5	0	0	5	11
% Heavy Truck	0.2	0	0	0	0.2	0	0.5	0.4	0	0.5	0	0	0	0	0	0	0.7	0	0	0.5	0.3

TechniQuest Corporation

4105 US Route 1, Suite # 14
Monmouth Junction, NJ 08852
Phone: 732-274-9500 Fax: 732-274-9510

File Name : 06-04-PM
Site Code : 4
Start Date : 5/14/2008
Page No : 2

	West Side Avenue Southbound					Danforth Avenue Westbound					West Side Avenue Northbound					Danforth Avenue Eastbound					
Start Time	Left	Thru	Right	Peds	App. Total	Left	Thru	Right	Peds	App. Total	Left	Thru	Right	Peds	App. Total	Left	Thru	Right	Peds	App. Total	Int. Total
Peak Hour Analysis From 04:00 PM to 06:15 PM - Peak 1 of 1																					
Peak Hour for Entire Intersection Begins at 05:30 PM																					
05:30 PM	76	0	44	0	120	0	71	33	0	104	0	0	0	0	0	33	64	0	0	97	321
05:45 PM	98	0	40	2	140	0	77	28	1	106	0	0	0	0	0	36	78	0	0	114	360
06:00 PM	79	0	37	0	116	0	87	27	0	114	0	0	0	0	0	56	87	0	0	143	373
06:15 PM	84	0	43	1	128	0	86	31	1	118	0	0	0	0	0	41	85	0	2	128	374
Total Volume	337	0	164	3	504	0	321	119	2	442	0	0	0	0	0	166	314	0	2	482	1428
% App. Total	66.9	0	32.5	0.6		0	72.6	26.9	0.5		0	0	0	0		34.4	65.1	0	0.4		
PHF	.860	.000	.932	.375	.900	.000	.922	.902	.500	.936	.000	.000	.000	.000	.000	.741	.902	.000	.250	.843	.955

TechniQuest Corporation

4105 US Route 1, Suite # 14
Monmouth Junction, NJ 08852
Phone: 732-274-9500 Fax: 732-274-9510

File Name : 06-04-PM
Site Code : 4
Start Date : 5/14/2008
Page No : 3

Peak Hour Data

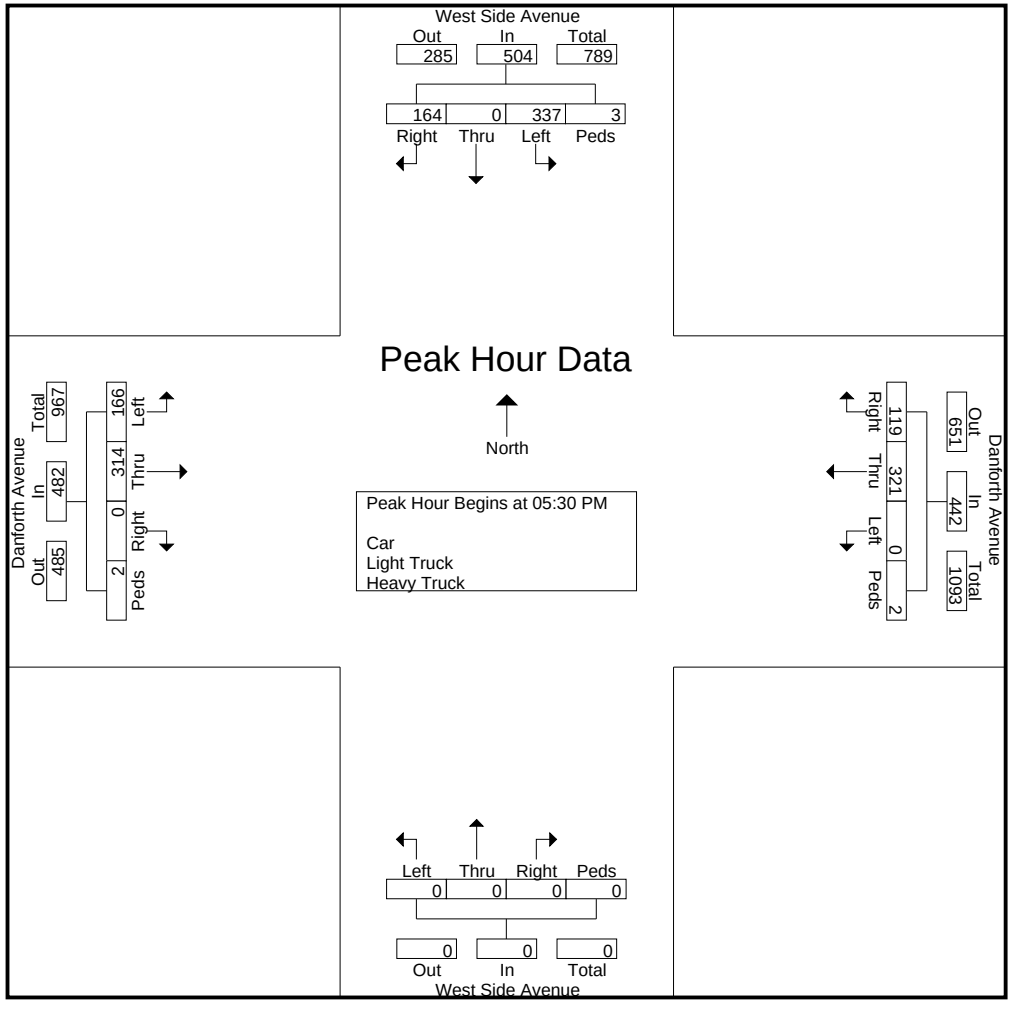

TechniQuest Corporation

4105 US Route 1, Suite # 14
Monmouth Junction, NJ 08852
Phone: 732-274-9500 Fax: 732-274-9510

File Name : 06-05-AM
Site Code : 5
Start Date : 5/14/2008
Page No : 1

Groups Printed- Car - Light Truck - Heavy Truck

	Ocean Avenue Southbound					Danforth Avenue Westbound					Ocean Avenue Northbound					Danforth Avenue Eastbound					
Start Time	Left	Thru	Right	Peds	App. Total	Left	Thru	Right	Peds	App. Total	Left	Thru	Right	Peds	App. Total	Left	Thru	Right	Peds	App. Total	Int. Total
06:30 AM	2	11	25	9	47	4	18	5	9	36	27	35	4	6	72	11	19	10	7	47	202
06:45 AM	3	15	26	8	52	3	14	5	9	31	25	41	8	6	80	13	23	14	6	56	219
Total	5	26	51	17	99	7	32	10	18	67	52	76	12	12	152	24	42	24	13	103	421
07:00 AM	4	19	19	9	51	5	24	8	16	53	22	47	5	7	81	14	29	4	9	56	241
07:15 AM	4	27	12	10	53	1	29	7	14	51	12	58	10	10	90	13	39	5	6	63	257
07:30 AM	4	31	18	6	59	2	40	7	22	71	3	59	8	2	72	25	36	7	21	89	291
07:45 AM	3	48	22	14	87	5	30	8	13	56	9	61	5	3	78	33	44	16	24	117	338
Total	15	125	71	39	250	13	123	30	65	231	46	225	28	22	321	85	148	32	60	325	1127
08:00 AM	1	32	30	35	98	6	25	6	16	53	16	51	7	21	95	18	33	22	10	83	329
08:15 AM	1	41	32	10	84	6	34	8	12	60	16	45	5	9	75	19	57	22	17	115	334
08:30 AM	2	43	36	8	89	4	28	5	9	46	16	47	8	5	76	23	35	15	12	85	296
08:45 AM	4	40	31	10	85	4	22	8	10	44	24	45	1	9	79	23	28	26	14	91	299
Total	8	156	129	63	356	20	109	27	47	203	72	188	21	44	325	83	153	85	53	374	1258
Grand Total	28	307	251	119	705	40	264	67	130	501	170	489	61	78	798	192	343	141	126	802	2806
Apprch %	4	43.5	35.6	16.9		8	52.7	13.4	25.9		21.3	61.3	7.6	9.8		23.9	42.8	17.6	15.7		
Total %	1	10.9	8.9	4.2	25.1	1.4	9.4	2.4	4.6	17.9	6.1	17.4	2.2	2.8	28.4	6.8	12.2	5	4.5	28.6	
Car	28	272	246	119	665	35	253	60	130	478	165	442	60	78	745	188	334	140	126	788	2676
% Car	100	88.6	98	100	94.3	87.5	95.8	89.6	100	95.4	97.1	90.4	98.4	100	93.4	97.9	97.4	99.3	100	98.3	95.4
Light Truck	0	32	3	0	35	3	9	6	0	18	4	42	1	0	47	3	9	1	0	13	113
% Light Truck	0	10.4	1.2	0	5	7.5	3.4	9	0	3.6	2.4	8.6	1.6	0	5.9	1.6	2.6	0.7	0	1.6	4
Heavy Truck	0	3	2	0	5	2	2	1	0	5	1	5	0	0	6	1	0	0	0	1	17
% Heavy Truck	0	1	0.8	0	0.7	5	0.8	1.5	0	1	0.6	1	0	0	0.8	0.5	0	0	0	0.1	0.6

TechniQuest Corporation

4105 US Route 1, Suite # 14
Monmouth Junction, NJ 08852
Phone: 732-274-9500 Fax: 732-274-9510

File Name : 06-05-AM
Site Code : 5
Start Date : 5/14/2008
Page No : 2

	Ocean Avenue Southbound					Danforth Avenue Westbound					Ocean Avenue Northbound					Danforth Avenue Eastbound					
Start Time	Left	Thru	Right	Peds	App. Total	Left	Thru	Right	Peds	App. Total	Left	Thru	Right	Peds	App. Total	Left	Thru	Right	Peds	App. Total	Int. Total
Peak Hour Analysis From 06:30 AM to 08:30 AM - Peak 1 of 1																					
Peak Hour for Entire Intersection Begins at 07:45 AM																					
07:45 AM	3	48	22	14	87	5	30	8	13	56	9	61	5	3	78	33	44	16	24	117	338
08:00 AM	1	32	30	35	98	6	25	6	16	53	16	51	7	21	95	18	33	22	10	83	329
08:15 AM	1	41	32	10	84	6	34	8	12	60	16	45	5	9	75	19	57	22	17	115	334
08:30 AM	2	43	36	8	89	4	28	5	9	46	16	47	8	5	76	23	35	15	12	85	296
Total Volume	7	164	120	67	358	21	117	27	50	215	57	204	25	38	324	93	169	75	63	400	1297
% App. Total	2	45.8	33.5	18.7		9.8	54.4	12.6	23.3		17.6	63	7.7	11.7		23.2	42.2	18.8	15.8		
PHF	.583	.854	.833	.479	.913	.875	.860	.844	.781	.896	.891	.836	.781	.452	.853	.705	.741	.852	.656	.855	.959

TechniQuest Corporation

4105 US Route 1, Suite # 14
Monmouth Junction, NJ 08852
Phone: 732-274-9500 Fax: 732-274-9510

File Name : 06-05-AM
Site Code : 5
Start Date : 5/14/2008
Page No : 3

Peak Hour Data

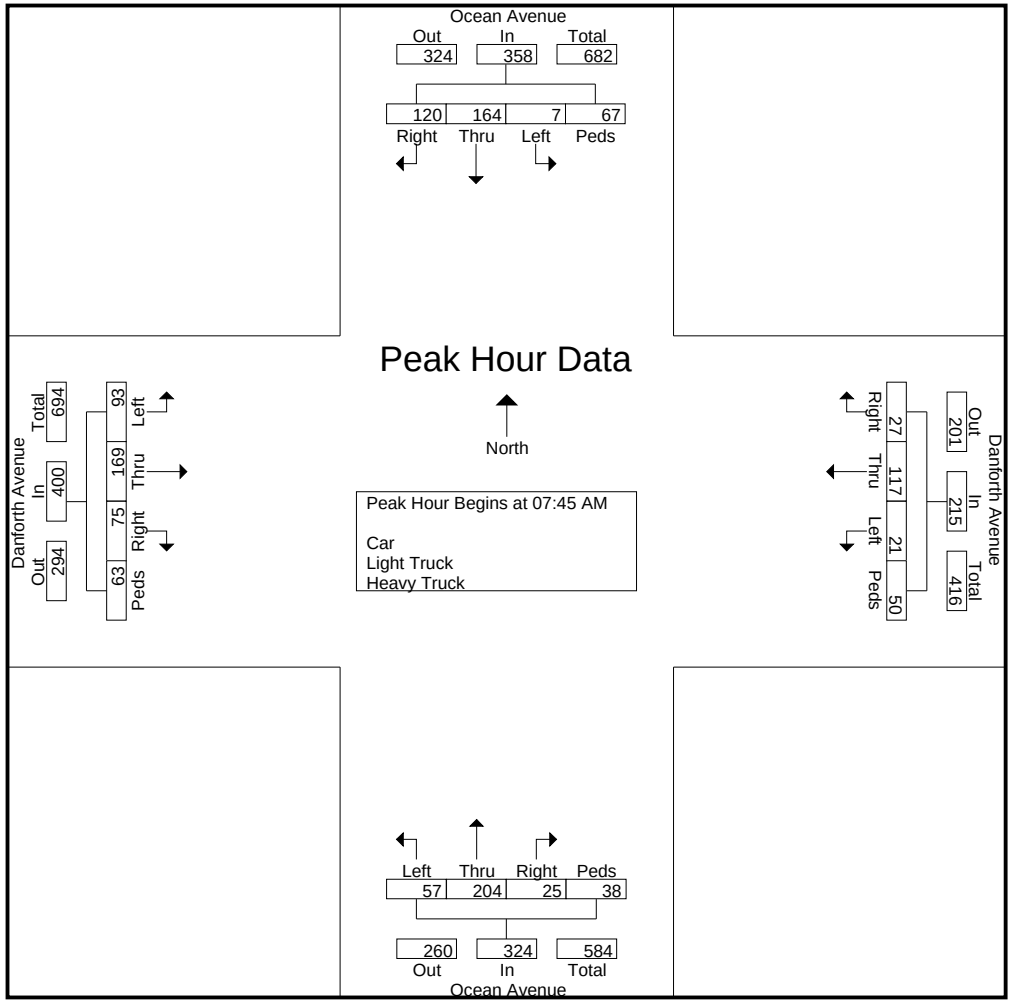

TechniQuest Corporation

4105 US Route 1, Suite # 14
Monmouth Junction, NJ 08852
Phone: 732-274-9500 Fax: 732-274-9510

File Name : 06-05-PM
Site Code : 5
Start Date : 5/14/2008
Page No : 1

Groups Printed- Car - Light Truck - Heavy Truck

	Ocean Avenue Southbound					Danforth Avenue Westbound					Ocean Avenue Northbound					Danforth Avenue Eastbound					
Start Time	Left	Thru	Right	Peds	App. Total	Left	Thru	Right	Peds	App. Total	Left	Thru	Right	Peds	App. Total	Left	Thru	Right	Peds	App. Total	Int. Total
04:00 PM	6	58	16	14	94	3	39	6	9	57	6	54	10	7	77	33	79	30	3	145	373
04:15 PM	7	57	23	16	103	4	42	8	9	63	14	63	11	8	96	30	84	24	5	143	405
04:30 PM	3	49	22	11	85	7	42	4	10	63	12	55	5	6	78	31	92	28	5	156	382
04:45 PM	4	61	23	19	107	5	39	2	19	65	18	68	5	4	95	32	93	23	2	150	417
Total	20	225	84	60	389	19	162	20	47	248	50	240	31	25	346	126	348	105	15	594	1577
05:00 PM	9	60	15	14	98	7	47	6	22	82	11	63	1	12	87	28	70	21	4	123	390
05:15 PM	9	70	11	12	102	8	50	2	4	64	4	60	3	6	73	30	100	25	3	158	397
05:30 PM	5	61	20	10	96	10	49	6	11	76	26	51	2	2	81	32	70	29	8	139	392
05:45 PM	3	61	34	9	107	5	39	5	7	56	30	60	3	2	95	30	111	27	4	172	430
Total	26	252	80	45	403	30	185	19	44	278	71	234	9	22	336	120	351	102	19	592	1609
06:00 PM	4	60	36	12	112	8	47	4	17	76	22	62	6	3	93	33	90	35	8	166	447
06:15 PM	8	72	30	8	118	7	53	5	6	71	29	56	10	16	111	30	99	29	5	163	463
Grand Total	58	609	230	125	1022	64	447	48	114	673	172	592	56	66	886	309	888	271	47	1515	4096
Apprch %	5.7	59.6	22.5	12.2		9.5	66.4	7.1	16.9		19.4	66.8	6.3	7.4		20.4	58.6	17.9	3.1		
Total %	1.4	14.9	5.6	3.1	25	1.6	10.9	1.2	2.8	16.4	4.2	14.5	1.4	1.6	21.6	7.5	21.7	6.6	1.1	37	
Car	58	575	225	125	983	63	438	48	114	663	169	563	55	66	853	305	884	271	47	1507	4006
% Car	100	94.4	97.8	100	96.2	98.4	98	100	100	98.5	98.3	95.1	98.2	100	96.3	98.7	99.5	100	100	99.5	97.8
Light Truck	0	31	5	0	36	1	7	0	0	8	2	29	1	0	32	3	2	0	0	5	81
% Light Truck	0	5.1	2.2	0	3.5	1.6	1.6	0	0	1.2	1.2	4.9	1.8	0	3.6	1	0.2	0	0	0.3	2
Heavy Truck	0	3	0	0	3	0	2	0	0	2	1	0	0	0	1	1	2	0	0	3	9
% Heavy Truck	0	0.5	0	0	0.3	0	0.4	0	0	0.3	0.6	0	0	0	0.1	0.3	0.2	0	0	0.2	0.2

TechniQuest Corporation

4105 US Route 1, Suite # 14
Monmouth Junction, NJ 08852
Phone: 732-274-9500 Fax: 732-274-9510

File Name : 06-05-PM
Site Code : 5
Start Date : 5/14/2008
Page No : 2

	Ocean Avenue Southbound					Danforth Avenue Westbound					Ocean Avenue Northbound					Danforth Avenue Eastbound					
Start Time	Left	Thru	Right	Peds	App. Total	Left	Thru	Right	Peds	App. Total	Left	Thru	Right	Peds	App. Total	Left	Thru	Right	Peds	App. Total	Int. Total
Peak Hour Analysis From 04:00 PM to 06:15 PM - Peak 1 of 1																					
Peak Hour for Entire Intersection Begins at 05:30 PM																					
05:30 PM	5	61	20	10	96	10	49	6	11	76	26	51	2	2	81	32	70	29	8	139	392
05:45 PM	3	61	34	9	107	5	39	5	7	56	30	60	3	2	95	30	111	27	4	172	430
06:00 PM	4	60	36	12	112	8	47	4	17	76	22	62	6	3	93	33	90	35	8	166	447
06:15 PM	8	72	30	8	118	7	53	5	6	71	29	56	10	16	111	30	99	29	5	163	463
Total Volume	20	254	120	39	433	30	188	20	41	279	107	229	21	23	380	125	370	120	25	640	1732
% App. Total	4.6	58.7	27.7	9		10.8	67.4	7.2	14.7		28.2	60.3	5.5	6.1		19.5	57.8	18.8	3.9		
PHF	.625	.882	.833	.813	.917	.750	.887	.833	.603	.918	.892	.923	.525	.359	.856	.947	.833	.857	.781	.930	.935

TechniQuest Corporation

4105 US Route 1, Suite # 14
Monmouth Junction, NJ 08852
Phone: 732-274-9500 Fax: 732-274-9510

File Name : 06-05-PM
Site Code : 5
Start Date : 5/14/2008
Page No : 3

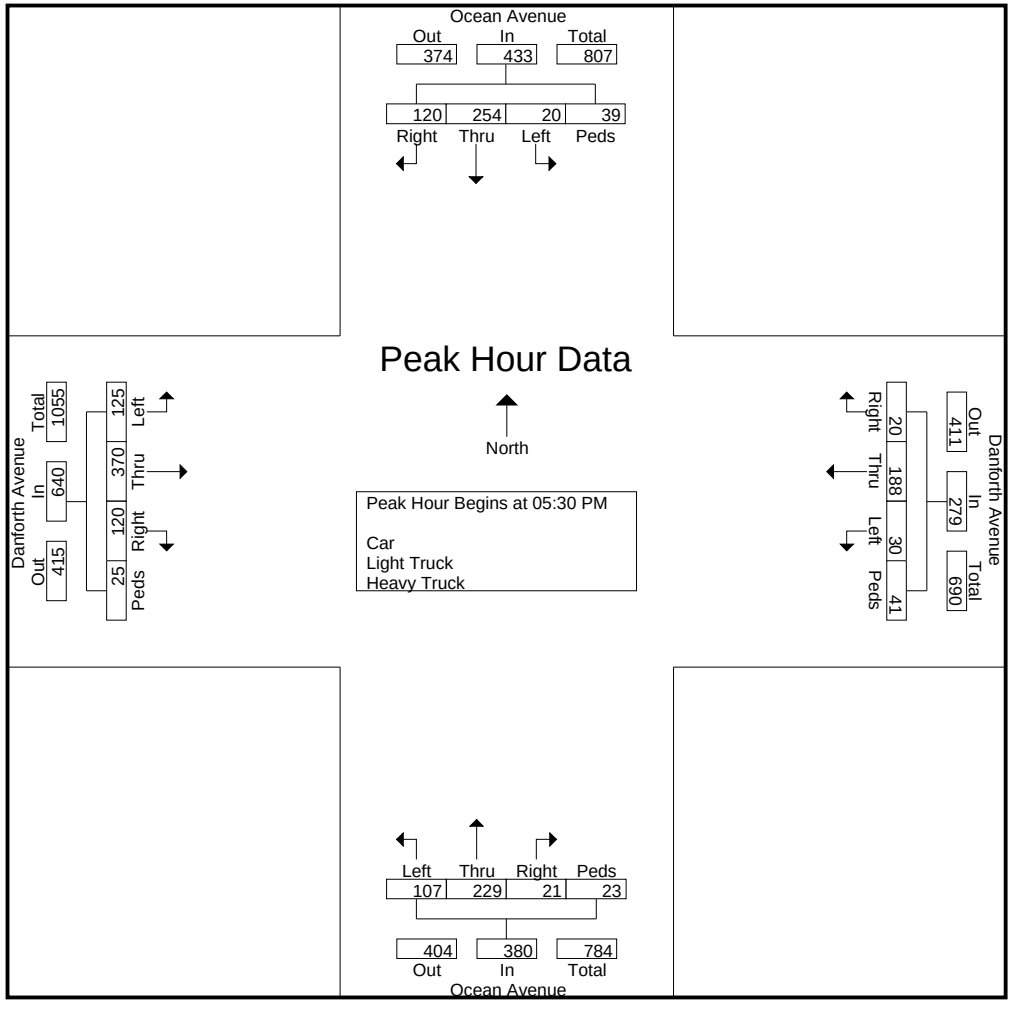

TechniQuest Corporation

4105 US Route 1, Suite # 14
Monmouth Junction, NJ 08852
Phone: 732-274-9500 Fax: 732-274-9510

File Name : 06-06-AM
Site Code : 6
Start Date : 5/14/2008
Page No : 1

Groups Printed- Car - Light Truck - Heavy Truck

	West Side Avenue Southbound					Communipaw Avenue Westbound					West Side Avenue Northbound					Communipaw Avenue Eastbound					
Start Time	Left	Thru	Right	Peds	App. Total	Left	Thru	Right	Peds	App. Total	Left	Thru	Right	Peds	App. Total	Left	Thru	Right	Peds	App. Total	Int. Total
06:30 AM	7	27	19	0	53	5	53	9	0	67	19	46	4	0	69	26	43	8	0	77	266
06:45 AM	8	32	22	0	62	6	46	8	1	61	21	49	5	0	75	30	36	7	0	73	271
Total	15	59	41	0	115	11	99	17	1	128	40	95	9	0	144	56	79	15	0	150	537
07:00 AM	5	37	26	0	68	6	80	5	1	92	25	54	6	0	85	32	71	7	1	111	356
07:15 AM	12	26	37	0	75	2	66	14	0	82	16	55	4	0	75	35	81	8	0	124	356
07:30 AM	1	27	30	0	58	6	84	5	0	95	34	56	14	0	104	50	82	12	0	144	401
07:45 AM	3	28	30	0	61	10	98	13	0	121	26	64	4	0	94	49	144	8	0	201	477
Total	21	118	123	0	262	24	328	37	1	390	101	229	28	0	358	166	378	35	1	580	1590
08:00 AM	1	44	30	0	75	3	112	6	0	121	22	50	7	0	79	44	131	4	0	179	454
08:15 AM	7	34	28	0	69	4	74	4	0	82	21	53	7	0	81	32	145	13	0	190	422
08:30 AM	7	41	29	1	78	2	79	4	1	86	18	50	7	0	75	29	110	22	3	164	403
08:45 AM	6	33	20	1	60	3	85	6	0	94	30	39	6	0	75	31	93	7	0	131	360
Total	21	152	107	2	282	12	350	20	1	383	91	192	27	0	310	136	479	46	3	664	1639
Grand Total	57	329	271	2	659	47	777	74	3	901	232	516	64	0	812	358	936	96	4	1394	3766
Apprch %	8.6	49.9	41.1	0.3		5.2	86.2	8.2	0.3		28.6	63.5	7.9	0		25.7	67.1	6.9	0.3		
Total %	1.5	8.7	7.2	0.1	17.5	1.2	20.6	2	0.1	23.9	6.2	13.7	1.7	0	21.6	9.5	24.9	2.5	0.1	37	
Car	57	329	271	2	659	47	777	74	3	901	232	516	64	0	812	358	936	96	4	1394	3766
% Car	100	100	100	100	100	100	100	100	100	100	100	100	100	0	100	100	100	100	100	100	100
Light Truck	0	0	0	0	0	0	0	0	0	0	0	0	0	0	0	0	0	0	0	0	0
% Light Truck	0	0	0	0	0	0	0	0	0	0	0	0	0	0	0	0	0	0	0	0	0
Heavy Truck	0	0	0	0	0	0	0	0	0	0	0	0	0	0	0	0	0	0	0	0	0
% Heavy Truck	0	0	0	0	0	0	0	0	0	0	0	0	0	0	0	0	0	0	0	0	0

TechniQuest Corporation

4105 US Route 1, Suite # 14
Monmouth Junction, NJ 08852
Phone: 732-274-9500 Fax: 732-274-9510

File Name : 06-06-AM
Site Code : 6
Start Date : 5/14/2008
Page No : 2

	West Side Avenue Southbound					Communipaw Avenue Westbound					West Side Avenue Northbound					Communipaw Avenue Eastbound					
Start Time	Left	Thru	Right	Peds	App. Total	Left	Thru	Right	Peds	App. Total	Left	Thru	Right	Peds	App. Total	Left	Thru	Right	Peds	App. Total	Int. Total
Peak Hour Analysis From 06:30 AM to 08:45 AM - Peak 1 of 1																					
Peak Hour for Entire Intersection Begins at 07:45 AM																					
07:45 AM	3	28	30	0	61	10	98	13	0	121	26	64	4	0	94	49	144	8	0	201	477
08:00 AM	1	44	30	0	75	3	112	6	0	121	22	50	7	0	79	44	131	4	0	179	454
08:15 AM	7	34	28	0	69	4	74	4	0	82	21	53	7	0	81	32	145	13	0	190	422
08:30 AM	7	41	29	1	78	2	79	4	1	86	18	50	7	0	75	29	110	22	3	164	403
Total Volume	18	147	117	1	283	19	363	27	1	410	87	217	25	0	329	154	530	47	3	734	1756
% App. Total	6.4	51.9	41.3	0.4		4.6	88.5	6.6	0.2		26.4	66	7.6	0		21	72.2	6.4	0.4		
PHF	.643	.835	.975	.250	.907	.475	.810	.519	.250	.847	.837	.848	.893	.000	.875	.786	.914	.534	.250	.913	.920

TechniQuest Corporation

4105 US Route 1, Suite # 14
Monmouth Junction, NJ 08852
Phone: 732-274-9500 Fax: 732-274-9510

File Name : 06-06-AM
Site Code : 6
Start Date : 5/14/2008
Page No : 3

Peak Hour Data

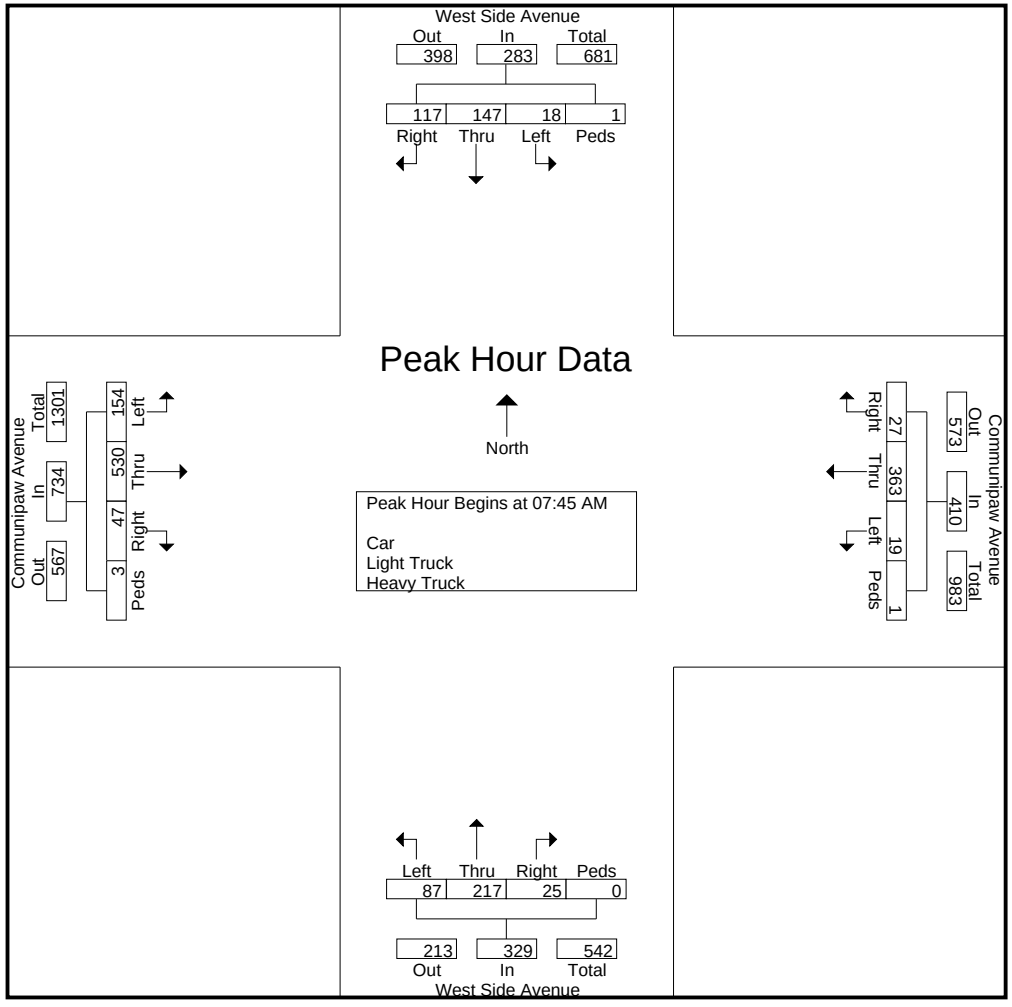

TechniQuest Corporation

4105 US Route 1, Suite # 14
Monmouth Junction, NJ 08852
Phone: 732-274-9500 Fax: 732-274-9510

File Name : 06-06-PM
Site Code : 6
Start Date : 5/14/2008
Page No : 1

Groups Printed- Car - Light Truck - Heavy Truck

	West Side Avenue Southbound					Communipaw Avenue Westbound					West Side Avenue Northbound					Communipaw Avenue Eastbound					
Start Time	Left	Thru	Right	Peds	App. Total	Left	Thru	Right	Peds	App. Total	Left	Thru	Right	Peds	App. Total	Left	Thru	Right	Peds	App. Total	Int. Total
04:00 PM	8	45	23	10	86	9	174	6	9	198	11	21	11	8	51	32	77	23	5	137	472
04:15 PM	7	49	21	12	89	9	186	4	10	209	12	24	14	7	57	38	94	24	4	160	515
04:30 PM	8	58	41	14	121	9	169	8	2	188	31	59	16	4	110	30	125	22	8	185	604
04:45 PM	11	72	43	17	143	4	170	12	5	191	27	52	10	15	104	56	113	24	12	205	643
Total	34	224	128	53	439	31	699	30	26	786	81	156	51	34	322	156	409	93	29	687	2234
05:00 PM	9	72	62	28	171	10	148	8	17	183	45	46	9	28	128	45	111	24	12	192	674
05:15 PM	7	77	44	31	159	10	161	8	14	193	23	68	9	33	133	61	108	32	22	223	708
05:30 PM	8	76	57	26	167	5	158	9	10	182	28	59	10	15	112	65	93	25	21	204	665
05:45 PM	7	69	60	24	160	4	180	10	8	202	23	55	13	28	119	37	98	13	18	166	647
Total	31	294	223	109	657	29	647	35	49	760	119	228	41	104	492	208	410	94	73	785	2694
06:00 PM	8	60	58	21	147	5	152	7	9	173	19	52	12	21	104	35	109	17	15	176	600
06:15 PM	7	52	51	16	126	4	140	6	7	157	16	45	11	15	87	32	118	14	13	177	547
Grand Total	80	630	460	199	1369	69	1638	78	91	1876	235	481	115	174	1005	431	1046	218	130	1825	6075
Apprch %	5.8	46	33.6	14.5		3.7	87.3	4.2	4.9		23.4	47.9	11.4	17.3		23.6	57.3	11.9	7.1		
Total %	1.3	10.4	7.6	3.3	22.5	1.1	27	1.3	1.5	30.9	3.9	7.9	1.9	2.9	16.5	7.1	17.2	3.6	2.1	30	
Car	80	581	445	199	1305	67	1598	77	91	1833	229	443	114	174	960	419	996	212	130	1757	5855
% Car	100	92.2	96.7	100	95.3	97.1	97.6	98.7	100	97.7	97.4	92.1	99.1	100	95.5	97.2	95.2	97.2	100	96.3	96.4
Light Truck	0	47	14	0	61	2	20	0	0	22	5	38	1	0	44	12	29	6	0	47	174
% Light Truck	0	7.5	3	0	4.5	2.9	1.2	0	0	1.2	2.1	7.9	0.9	0	4.4	2.8	2.8	2.8	0	2.6	2.9
Heavy Truck	0	2	1	0	3	0	20	1	0	21	1	0	0	0	1	0	21	0	0	21	46
% Heavy Truck	0	0.3	0.2	0	0.2	0	1.2	1.3	0	1.1	0.4	0	0	0	0.1	0	2	0	0	1.2	0.8

TechniQuest Corporation

4105 US Route 1, Suite # 14
Monmouth Junction, NJ 08852
Phone: 732-274-9500 Fax: 732-274-9510

File Name : 06-06-PM
Site Code : 6
Start Date : 5/14/2008
Page No : 2

	West Side Avenue Southbound					Communipaw Avenue Westbound					West Side Avenue Northbound					Communipaw Avenue Eastbound					
Start Time	Left	Thru	Right	Peds	App. Total	Left	Thru	Right	Peds	App. Total	Left	Thru	Right	Peds	App. Total	Left	Thru	Right	Peds	App. Total	Int. Total
Peak Hour Analysis From 04:00 PM to 05:45 PM - Peak 1 of 1																					
Peak Hour for Entire Intersection Begins at 05:00 PM																					
05:00 PM	9	72	62	28	171	10	148	8	17	183	45	46	9	28	128	45	111	24	12	192	674
05:15 PM	7	77	44	31	159	10	161	8	14	193	23	68	9	33	133	61	108	32	22	223	708
05:30 PM	8	76	57	26	167	5	158	9	10	182	28	59	10	15	112	65	93	25	21	204	665
05:45 PM	7	69	60	24	160	4	180	10	8	202	23	55	13	28	119	37	98	13	18	166	647
Total Volume	31	294	223	109	657	29	647	35	49	760	119	228	41	104	492	208	410	94	73	785	2694
% App. Total	4.7	44.7	33.9	16.6		3.8	85.1	4.6	6.4		24.2	46.3	8.3	21.1		26.5	52.2	12	9.3		
PHF	.861	.955	.899	.879	.961	.725	.899	.875	.721	.941	.661	.838	.788	.788	.925	.800	.923	.734	.830	.880	.951

TechniQuest Corporation

4105 US Route 1, Suite # 14
Monmouth Junction, NJ 08852
Phone: 732-274-9500 Fax: 732-274-9510

File Name : 06-06-PM
Site Code : 6
Start Date : 5/14/2008
Page No : 3

Peak Hour Data

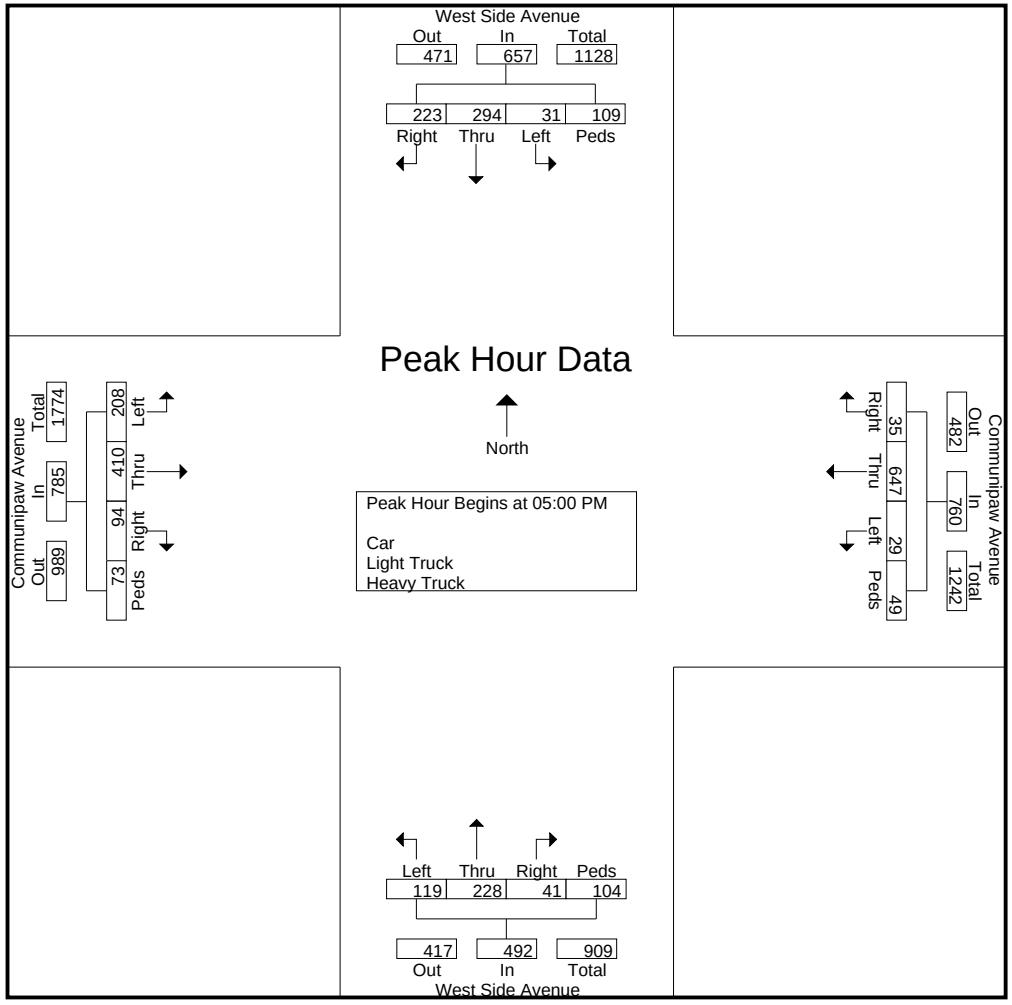

TechniQuest Corporation

4105 US Route 1, Suite # 14
Monmouth Junction, NJ 08852
Phone: 732-274-9500 Fax: 732-274-9510

File Name : 06-07-AM
Site Code : 7
Start Date : 5/15/2008
Page No : 1

Groups Printed- Car - Light Truck - Heavy Truck

	JFK Blvd Southbound					Communipaw Avenue Westbound					JFK Blvd Northbound					Communipaw Avenue Eastbound					
Start Time	Left	Thru	Right	Peds	App. Total	Left	Thru	Right	Peds	App. Total	Left	Thru	Right	Peds	App. Total	Left	Thru	Right	Peds	App. Total	Int. Total
06:30 AM	13	196	23	1	233	19	38	4	0	61	5	45	11	1	62	9	40	5	0	54	410
06:45 AM	11	217	13	0	241	25	40	3	0	68	6	56	13	3	78	3	42	3	0	48	435
Total	24	413	36	1	474	44	78	7	0	129	11	101	24	4	140	12	82	8	0	102	845
07:00 AM	7	229	14	0	250	15	72	3	0	90	4	88	15	0	107	6	72	4	0	82	529
07:15 AM	5	157	10	0	172	14	68	3	0	85	5	136	16	1	158	7	86	3	0	96	511
07:30 AM	8	149	21	0	178	11	65	6	0	82	9	337	45	0	391	17	79	1	0	97	748
07:45 AM	4	212	16	2	234	13	100	5	6	124	6	331	27	2	366	11	133	6	0	150	874
Total	24	747	61	2	834	53	305	17	6	381	24	892	103	3	1022	41	370	14	0	425	2662
08:00 AM	5	176	15	0	196	15	105	8	1	129	3	331	31	0	365	12	123	3	0	138	828
08:15 AM	3	149	12	0	164	5	68	7	0	80	3	281	21	1	306	9	148	2	0	159	709
08:30 AM	3	136	10	0	149	11	78	10	0	99	6	248	40	0	294	12	110	1	0	123	665
08:45 AM	7	87	10	0	104	13	74	6	0	93	4	210	22	3	239	18	85	1	0	104	540
Total	18	548	47	0	613	44	325	31	1	401	16	1070	114	4	1204	51	466	7	0	524	2742
Grand Total	66	1708	144	3	1921	141	708	55	7	911	51	2063	241	11	2366	104	918	29	0	1051	6249
Apprch %	3.4	88.9	7.5	0.2		15.5	77.7	6	0.8		2.2	87.2	10.2	0.5		9.9	87.3	2.8	0		
Total %	1.1	27.3	2.3	0	30.7	2.3	11.3	0.9	0.1	14.6	0.8	33	3.9	0.2	37.9	1.7	14.7	0.5	0	16.8	
Car	65	1667	141	1	1874	137	618	51	7	813	44	1973	226	11	2254	100	835	28	0	963	5904
% Car	98.5	97.6	97.9	33.3	97.6	97.2	87.3	92.7	100	89.2	86.3	95.6	93.8	100	95.3	96.2	91	96.6	0	91.6	94.5
Light Truck	1	40	3	1	45	3	51	4	0	58	4	88	12	0	104	4	48	1	0	53	260
% Light Truck	1.5	2.3	2.1	33.3	2.3	2.1	7.2	7.3	0	6.4	7.8	4.3	5	0	4.4	3.8	5.2	3.4	0	5	4.2
Heavy Truck	0	1	0	1	2	1	39	0	0	40	3	2	3	0	8	0	35	0	0	35	85
% Heavy Truck	0	0.1	0	33.3	0.1	0.7	5.5	0	0	4.4	5.9	0.1	1.2	0	0.3	0	3.8	0	0	3.3	1.4

TechniQuest Corporation

4105 US Route 1, Suite # 14
Monmouth Junction, NJ 08852
Phone: 732-274-9500 Fax: 732-274-9510

File Name : 06-07-AM
Site Code : 7
Start Date : 5/15/2008
Page No : 2

	JFK Blvd Southbound					Communipaw Avenue Westbound					JFK Blvd Northbound					Communipaw Avenue Eastbound					
Start Time	Left	Thru	Right	Peds	App. Total	Left	Thru	Right	Peds	App. Total	Left	Thru	Right	Peds	App. Total	Left	Thru	Right	Peds	App. Total	Int. Total
Peak Hour Analysis From 06:30 AM to 08:45 AM - Peak 1 of 1																					
Peak Hour for Entire Intersection Begins at 07:30 AM																					
07:30 AM	8	149	21	0	178	11	65	6	0	82	9	337	45	0	391	17	79	1	0	97	748
07:45 AM	4	212	16	2	234	13	100	5	6	124	6	331	27	2	366	11	133	6	0	150	874
08:00 AM	5	176	15	0	196	15	105	8	1	129	3	331	31	0	365	12	123	3	0	138	828
08:15 AM	3	149	12	0	164	5	68	7	0	80	3	281	21	1	306	9	148	2	0	159	709
Total Volume	20	686	64	2	772	44	338	26	7	415	21	1280	124	3	1428	49	483	12	0	544	3159
% App. Total	2.6	88.9	8.3	0.3		10.6	81.4	6.3	1.7		1.5	89.6	8.7	0.2		9	88.8	2.2	0		
PHF	.625	.809	.762	.250	.825	.733	.805	.813	.292	.804	.583	.950	.689	.375	.913	.721	.816	.500	.000	.855	.904

TechniQuest Corporation

4105 US Route 1, Suite # 14
Monmouth Junction, NJ 08852
Phone: 732-274-9500 Fax: 732-274-9510

File Name : 06-07-AM
Site Code : 7
Start Date : 5/15/2008
Page No : 3

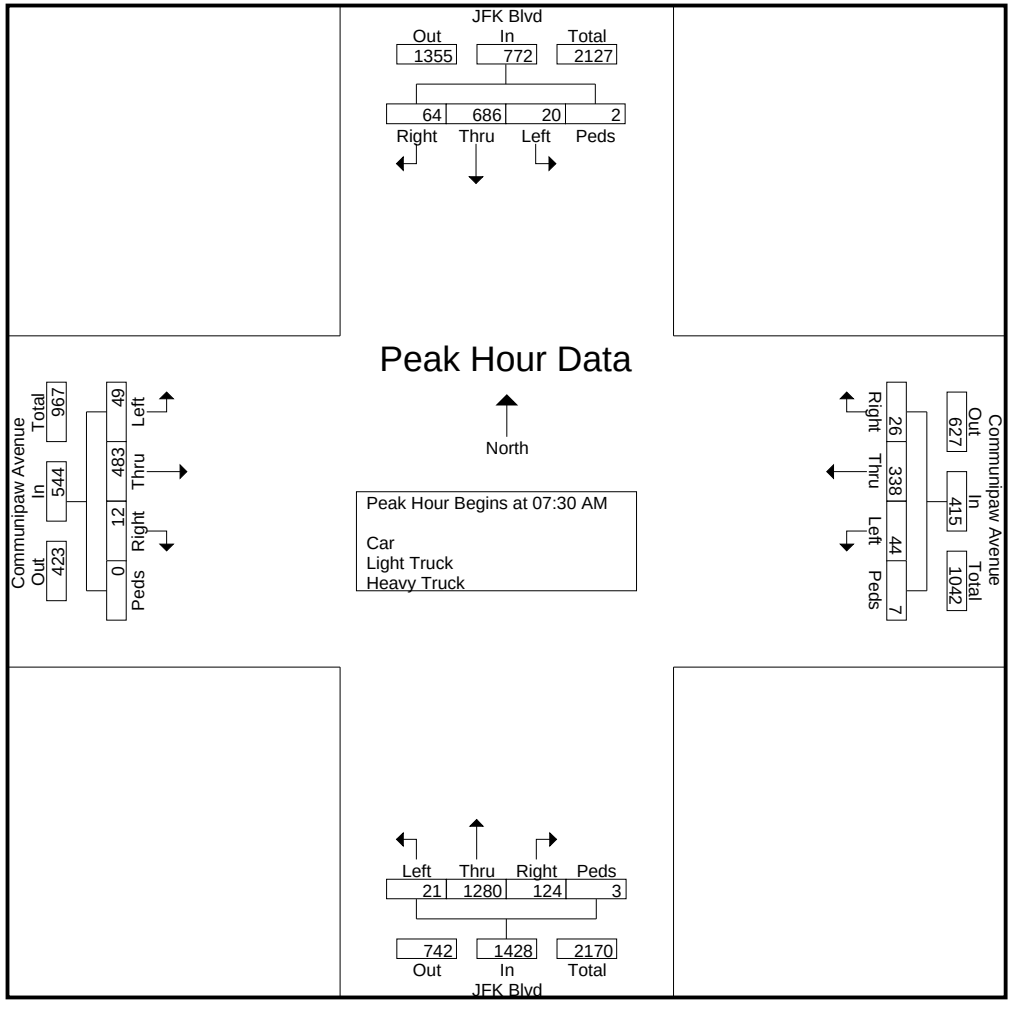

TechniQuest Corporation

4105 US Route 1, Suite # 14
Monmouth Junction, NJ 08852
Phone: 732-274-9500 Fax: 732-274-9510

File Name : 06-07-PM
Site Code : 7
Start Date : 5/15/2008
Page No : 1

Groups Printed- Car - Light Truck - Heavy Truck

	JFK Blvd Southbound					Communipaw Avenue Westbound					JFK Blvd Northbound					Communipaw Avenue Eastbound					
Start Time	Left	Thru	Right	Peds	App. Total	Left	Thru	Right	Peds	App. Total	Left	Thru	Right	Peds	App. Total	Left	Thru	Right	Peds	App. Total	Int. Total
04:00 PM	15	191	42	16	264	21	125	9	13	168	22	143	27	9	201	21	55	21	4	101	734
04:15 PM	10	205	39	16	270	20	142	11	9	182	18	151	22	11	202	18	77	18	8	121	775
04:30 PM	8	229	28	10	275	22	124	16	16	178	35	180	25	14	254	31	107	11	6	155	862
04:45 PM	8	239	34	14	295	31	131	11	7	180	22	186	32	12	252	25	97	13	7	142	869
Total	41	864	143	56	1104	94	522	47	45	708	97	660	106	46	909	95	336	63	25	519	3240
05:00 PM	11	267	28	22	328	27	115	14	10	166	24	184	44	12	264	16	93	19	12	140	898
05:15 PM	16	233	39	11	299	37	112	26	5	180	27	244	31	7	309	24	84	16	4	128	916
05:30 PM	10	271	34	20	335	16	106	24	5	151	33	201	34	9	277	26	71	14	9	120	883
05:45 PM	14	247	43	10	314	20	121	22	5	168	30	199	14	9	252	25	79	15	7	126	860
Total	51	1018	144	63	1276	100	454	86	25	665	114	828	123	37	1102	91	327	64	32	514	3557
06:00 PM	11	260	32	17	320	15	101	11	4	131	33	153	26	6	218	22	92	15	0	129	798
06:15 PM	12	211	30	10	263	34	95	13	3	145	27	147	27	12	213	26	95	16	7	144	765
Grand Total	115	2353	349	146	2963	243	1172	157	77	1649	271	1788	282	101	2442	234	850	158	64	1306	8360
Apprch %	3.9	79.4	11.8	4.9		14.7	71.1	9.5	4.7		11.1	73.2	11.5	4.1		17.9	65.1	12.1	4.9		
Total %	1.4	28.1	4.2	1.7	35.4	2.9	14	1.9	0.9	19.7	3.2	21.4	3.4	1.2	29.2	2.8	10.2	1.9	0.8	15.6	
Car	110	2311	342	146	2909	239	1124	152	77	1592	268	1751	276	101	2396	232	798	156	64	1250	8147
% Car	95.7	98.2	98	100	98.2	98.4	95.9	96.8	100	96.5	98.9	97.9	97.9	100	98.1	99.1	93.9	98.7	100	95.7	97.5
Light Truck	3	42	5	0	50	4	23	5	0	32	0	29	5	0	34	2	19	1	0	22	138
% Light Truck	2.6	1.8	1.4	0	1.7	1.6	2	3.2	0	1.9	0	1.6	1.8	0	1.4	0.9	2.2	0.6	0	1.7	1.7
Heavy Truck	2	0	2	0	4	0	25	0	0	25	3	8	1	0	12	0	33	1	0	34	75
% Heavy Truck	1.7	0	0.6	0	0.1	0	2.1	0	0	1.5	1.1	0.4	0.4	0	0.5	0	3.9	0.6	0	2.6	0.9

TechniQuest Corporation

4105 US Route 1, Suite # 14
Monmouth Junction, NJ 08852
Phone: 732-274-9500 Fax: 732-274-9510

File Name : 06-07-PM
Site Code : 7
Start Date : 5/15/2008
Page No : 2

	JFK Blvd Southbound					Communipaw Avenue Westbound					JFK Blvd Northbound					Communipaw Avenue Eastbound					
Start Time	Left	Thru	Right	Peds	App. Total	Left	Thru	Right	Peds	App. Total	Left	Thru	Right	Peds	App. Total	Left	Thru	Right	Peds	App. Total	Int. Total
Peak Hour Analysis From 04:00 PM to 06:15 PM - Peak 1 of 1																					
Peak Hour for Entire Intersection Begins at 04:45 PM																					
04:45 PM	8	239	34	14	295	31	131	11	7	180	22	186	32	12	252	25	97	13	7	142	869
05:00 PM	11	267	28	22	328	27	115	14	10	166	24	184	44	12	264	16	93	19	12	140	898
05:15 PM	16	233	39	11	299	37	112	26	5	180	27	244	31	7	309	24	84	16	4	128	916
05:30 PM	10	271	34	20	335	16	106	24	5	151	33	201	34	9	277	26	71	14	9	120	883
Total Volume	45	1010	135	67	1257	111	464	75	27	677	106	815	141	40	1102	91	345	62	32	530	3566
% App. Total	3.6	80.4	10.7	5.3		16.4	68.5	11.1	4		9.6	74	12.8	3.6		17.2	65.1	11.7	6		
PHF	.703	.932	.865	.761	.938	.750	.885	.721	.675	.940	.803	.835	.801	.833	.892	.875	.889	.816	.667	.933	.973

TechniQuest Corporation

4105 US Route 1, Suite # 14
Monmouth Junction, NJ 08852
Phone: 732-274-9500 Fax: 732-274-9510

File Name : 06-07-PM
Site Code : 7
Start Date : 5/15/2008
Page No : 3

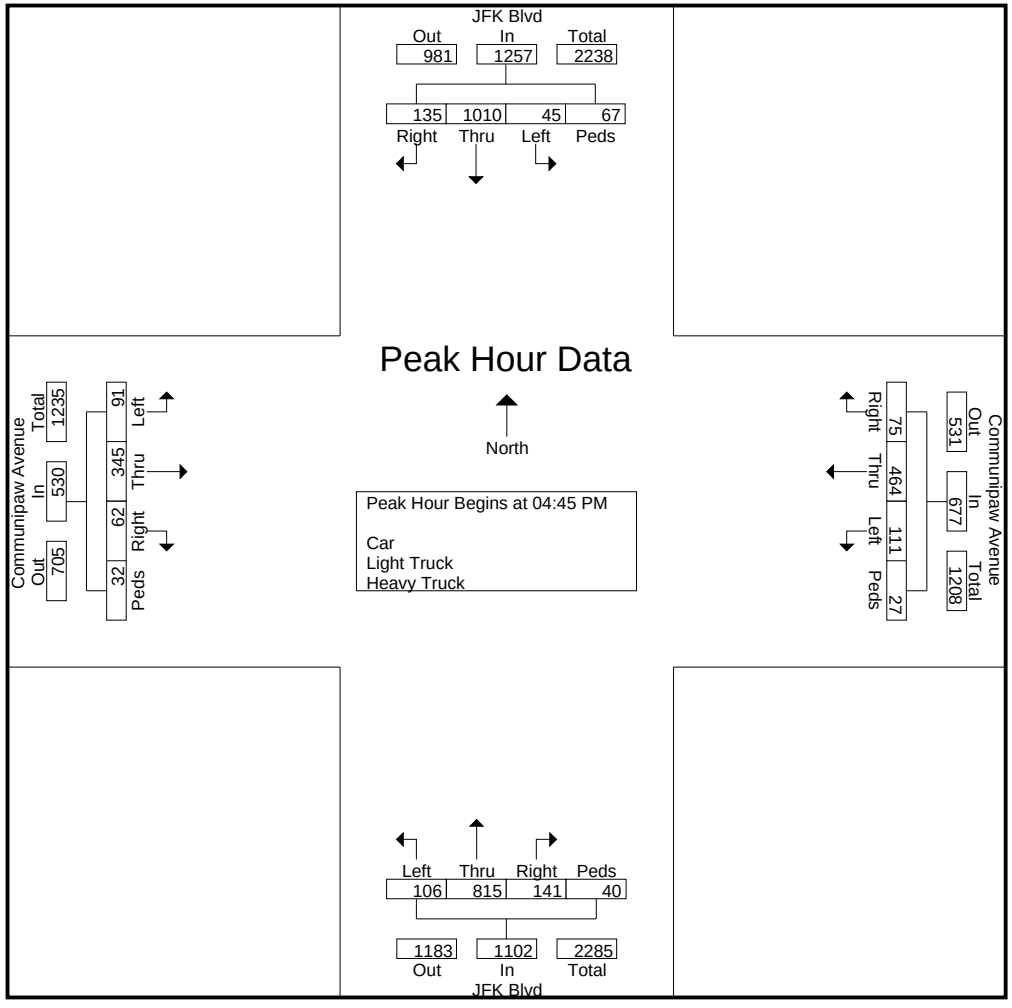

TechniQuest Corporation

4105 US Route 1, Suite # 14
Monmouth Junction, NJ 08852
Phone: 732-274-9500 Fax: 732-274-9510

File Name : 06-08-AM
Site Code : 8
Start Date : 5/15/2008
Page No : 1

Groups Printed- Car - Light Truck - Heavy Truck

	Communipaw Avenue Southbound					Martin Luther King Jr. Dr Westbound					Communipaw Avenue Northbound					Martin Luther King Jr. Dr Eastbound					
Start Time	Left	Thru	Right	Peds	App. Total	Left	Thru	Right	Peds	App. Total	Left	Thru	Right	Peds	App. Total	Left	Thru	Right	Peds	App. Total	Int. Total
06:30 AM	1	7	3	4	15	3	60	6	2	71	8	23	2	2	35	5	50	4	2	61	182
06:45 AM	3	10	6	7	26	4	55	6	3	68	3	31	8	7	49	14	43	6	4	67	210
Total	4	17	9	11	41	7	115	12	5	139	11	54	10	9	84	19	93	10	6	128	392
07:00 AM	4	14	3	1	22	3	75	3	3	84	5	28	7	3	43	9	78	9	1	97	246
07:15 AM	1	18	3	4	26	6	68	7	4	85	5	81	4	2	92	11	81	12	2	106	309
07:30 AM	2	34	1	4	41	1	75	4	11	91	10	81	3	5	99	5	113	12	1	131	362
07:45 AM	2	33	0	2	37	10	96	15	7	128	15	107	6	14	142	4	151	4	3	162	469
Total	9	99	7	11	126	20	314	29	25	388	35	297	20	24	376	29	423	37	7	496	1386
08:00 AM	8	31	6	7	52	9	121	11	1	142	3	71	6	13	93	15	135	7	2	159	446
08:15 AM	2	52	2	16	72	6	71	14	13	104	8	59	7	32	106	9	157	11	27	204	486
08:30 AM	1	47	3	6	57	6	99	17	9	131	6	67	8	16	97	19	126	10	3	158	443
08:45 AM	5	42	5	7	59	11	81	11	13	116	6	65	7	21	99	9	96	11	11	127	401
Total	16	172	16	36	240	32	372	53	36	493	23	262	28	82	395	52	514	39	43	648	1776
Grand Total	29	288	32	58	407	59	801	94	66	1020	69	613	58	115	855	100	1030	86	56	1272	3554
Apprch %	7.1	70.8	7.9	14.3		5.8	78.5	9.2	6.5		8.1	71.7	6.8	13.5		7.9	81	6.8	4.4		
Total %	0.8	8.1	0.9	1.6	11.5	1.7	22.5	2.6	1.9	28.7	1.9	17.2	1.6	3.2	24.1	2.8	29	2.4	1.6	35.8	
Car	27	267	27	58	379	58	712	89	66	925	65	562	55	115	797	98	947	73	56	1174	3275
% Car	93.1	92.7	84.4	100	93.1	98.3	88.9	94.7	100	90.7	94.2	91.7	94.8	100	93.2	98	91.9	84.9	100	92.3	92.1
Light Truck	2	21	1	0	24	1	38	4	0	43	4	50	3	0	57	0	40	5	0	45	169
% Light Truck	6.9	7.3	3.1	0	5.9	1.7	4.7	4.3	0	4.2	5.8	8.2	5.2	0	6.7	0	3.9	5.8	0	3.5	4.8
Heavy Truck	0	0	4	0	4	0	51	1	0	52	0	1	0	0	1	2	43	8	0	53	110
% Heavy Truck	0	0	12.5	0	1	0	6.4	1.1	0	5.1	0	0.2	0	0	0.1	2	4.2	9.3	0	4.2	3.1

TechniQuest Corporation

4105 US Route 1, Suite # 14
Monmouth Junction, NJ 08852
Phone: 732-274-9500 Fax: 732-274-9510

File Name : 06-08-AM
Site Code : 8
Start Date : 5/15/2008
Page No : 2

	Communipaw Avenue Southbound					Martin Luther King Jr. Dr Westbound					Communipaw Avenue Northbound					Martin Luther King Jr. Dr Eastbound					
Start Time	Left	Thru	Right	Peds	App. Total	Left	Thru	Right	Peds	App. Total	Left	Thru	Right	Peds	App. Total	Left	Thru	Right	Peds	App. Total	Int. Total
Peak Hour Analysis From 06:30 AM to 08:45 AM - Peak 1 of 1																					
Peak Hour for Entire Intersection Begins at 07:45 AM																					
07:45 AM	2	33	0	2	37	10	96	15	7	128	15	107	6	14	142	4	151	4	3	162	469
08:00 AM	8	31	6	7	52	9	121	11	1	142	3	71	6	13	93	15	135	7	2	159	446
08:15 AM	2	52	2	16	72	6	71	14	13	104	8	59	7	32	106	9	157	11	27	204	486
08:30 AM	1	47	3	6	57	6	99	17	9	131	6	67	8	16	97	19	126	10	3	158	443
Total Volume	13	163	11	31	218	31	387	57	30	505	32	304	27	75	438	47	569	32	35	683	1844
% App. Total	6	74.8	5	14.2		6.1	76.6	11.3	5.9		7.3	69.4	6.2	17.1		6.9	83.3	4.7	5.1		
PHF	.406	.784	.458	.484	.757	.775	.800	.838	.577	.889	.533	.710	.844	.586	.771	.618	.906	.727	.324	.837	.949

TechniQuest Corporation

4105 US Route 1, Suite # 14
Monmouth Junction, NJ 08852
Phone: 732-274-9500 Fax: 732-274-9510

File Name : 06-08-AM
Site Code : 8
Start Date : 5/15/2008
Page No : 3

Peak Hour Data

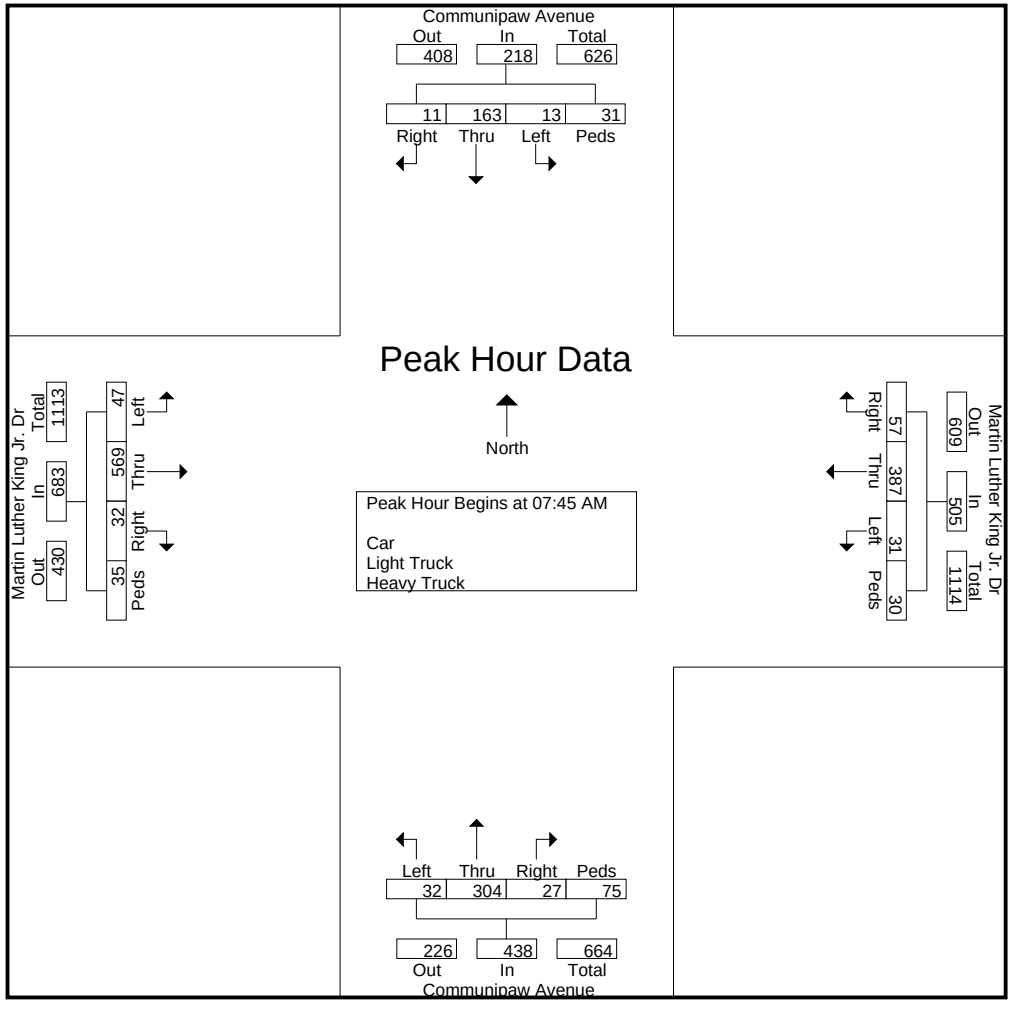

TechniQuest Corporation

4105 US Route 1, Suite # 14
Monmouth Junction, NJ 08852
Phone: 732-274-9500 Fax: 732-274-9510

File Name : 06-08-PM
Site Code : 8
Start Date : 5/15/2008
Page No : 1

Groups Printed- Car - Light Truck - Heavy Truck

	MLK Jr. Dr. Southbound					Communipaw Avenue Westbound					MLK Jr. Dr. Northbound					Communipaw Avenue Eastbound					
Start Time	Left	Thru	Right	Peds	App. Total	Left	Thru	Right	Peds	App. Total	Left	Thru	Right	Peds	App. Total	Left	Thru	Right	Peds	App. Total	Int. Total
04:00 PM	4	55	15	19	93	10	120	16	5	151	11	40	5	10	66	19	70	5	8	102	412
04:15 PM	2	69	19	21	111	13	129	20	9	171	14	49	6	7	76	21	83	7	7	118	476
04:30 PM	4	55	11	21	91	14	131	15	14	174	17	40	6	13	76	19	100	18	11	148	489
04:45 PM	3	56	17	26	102	10	141	15	14	180	19	43	7	10	79	14	107	14	8	143	504
Total	13	235	62	87	397	47	521	66	42	676	61	172	24	40	297	73	360	44	34	511	1881
05:00 PM	6	62	10	20	98	21	127	17	28	193	12	49	4	25	90	26	95	23	8	152	533
05:15 PM	11	65	13	16	105	10	152	19	11	192	8	53	9	13	83	13	95	20	12	140	520
05:30 PM	4	64	18	31	117	14	126	10	8	158	10	44	10	17	81	23	81	10	20	134	490
05:45 PM	5	48	18	12	83	18	146	12	7	183	7	22	12	9	50	14	77	12	7	110	426
Total	26	239	59	79	403	63	551	58	54	726	37	168	35	64	304	76	348	65	47	536	1969
06:00 PM	5	57	16	9	87	13	106	24	10	153	4	39	7	11	61	13	92	22	8	135	436
06:15 PM	11	64	14	15	104	11	115	24	8	158	11	70	8	8	97	17	98	16	14	145	504
Grand Total	55	595	151	190	991	134	1293	172	114	1713	113	449	74	123	759	179	898	147	103	1327	4790
Apprch %	5.5	60	15.2	19.2		7.8	75.5	10	6.7		14.9	59.2	9.7	16.2		13.5	67.7	11.1	7.8		
Total %	1.1	12.4	3.2	4	20.7	2.8	27	3.6	2.4	35.8	2.4	9.4	1.5	2.6	15.8	3.7	18.7	3.1	2.2	27.7	
Car	55	574	151	190	970	134	1247	166	113	1660	105	431	73	123	732	173	860	146	103	1282	4644
% Car	100	96.5	100	100	97.9	100	96.4	96.5	99.1	96.9	92.9	96	98.6	100	96.4	96.6	95.8	99.3	100	96.6	97
Light Truck	0	19	0	0	19	0	19	5	1	25	6	18	1	0	25	3	14	1	0	18	87
% Light Truck	0	3.2	0	0	1.9	0	1.5	2.9	0.9	1.5	5.3	4	1.4	0	3.3	1.7	1.6	0.7	0	1.4	1.8
Heavy Truck	0	2	0	0	2	0	27	1	0	28	2	0	0	0	2	3	24	0	0	27	59
% Heavy Truck	0	0.3	0	0	0.2	0	2.1	0.6	0	1.6	1.8	0	0	0	0.3	1.7	2.7	0	0	2	1.2

TechniQuest Corporation

4105 US Route 1, Suite # 14
Monmouth Junction, NJ 08852
Phone: 732-274-9500 Fax: 732-274-9510

File Name : 06-08-PM
Site Code : 8
Start Date : 5/15/2008
Page No : 2

	MLK Jr. Dr. Southbound					Communipaw Avenue Westbound					MLK Jr. Dr. Northbound					Communipaw Avenue Eastbound					
Start Time	Left	Thru	Right	Peds	App. Total	Left	Thru	Right	Peds	App. Total	Left	Thru	Right	Peds	App. Total	Left	Thru	Right	Peds	App. Total	Int. Total
Peak Hour Analysis From 04:00 PM to 06:15 PM - Peak 1 of 1																					
Peak Hour for Entire Intersection Begins at 04:45 PM																					
04:45 PM	3	56	17	26	102	10	141	15	14	180	19	43	7	10	79	14	107	14	8	143	504
05:00 PM	6	62	10	20	98	21	127	17	28	193	12	49	4	25	90	26	95	23	8	152	533
05:15 PM	11	65	13	16	105	10	152	19	11	192	8	53	9	13	83	13	95	20	12	140	520
05:30 PM	4	64	18	31	117	14	126	10	8	158	10	44	10	17	81	23	81	10	20	134	490
Total Volume	24	247	58	93	422	55	546	61	61	723	49	189	30	65	333	76	378	67	48	569	2047
% App. Total	5.7	58.5	13.7	22		7.6	75.5	8.4	8.4		14.7	56.8	9	19.5		13.4	66.4	11.8	8.4		
PHF	.545	.950	.806	.750	.902	.655	.898	.803	.545	.937	.645	.892	.750	.650	.925	.731	.883	.728	.600	.936	.960

TechniQuest Corporation

4105 US Route 1, Suite # 14
Monmouth Junction, NJ 08852
Phone: 732-274-9500 Fax: 732-274-9510

File Name : 06-08-PM
Site Code : 8
Start Date : 5/15/2008
Page No : 3

Peak Hour Data

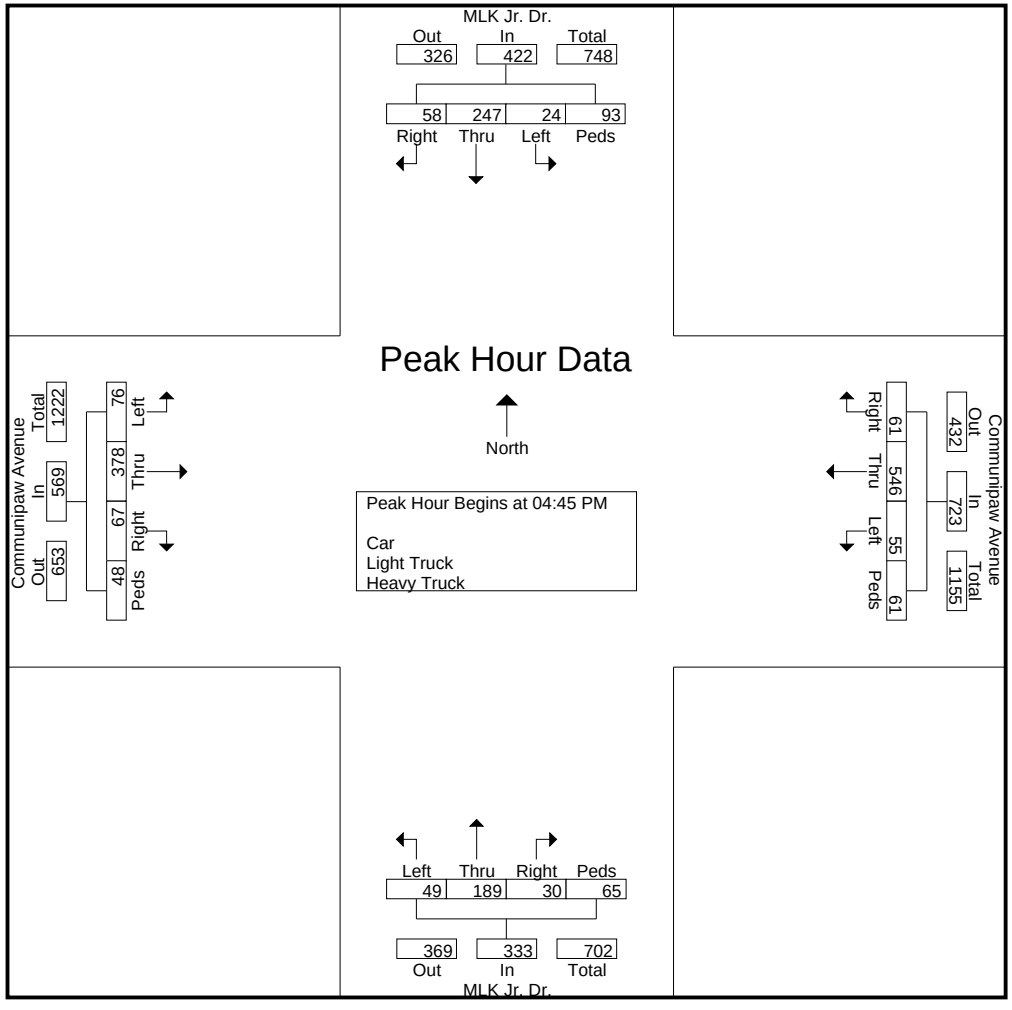

TechniQuest Corporation

4105 US Route 1, Suite # 14
Monmouth Junction, NJ 08852
Phone: 732-274-9500 Fax: 732-274-9510

File Name : 06-09AM-NB May08
Site Code : 9
Start Date : 5/15/2008
Page No : 1

Groups Printed- Car - Light Truck - Heavy Truck

	Garfield Avenue Southbound					Communipaw Avenue Westbound					Garfield Avenue Northbound					Eastbound					
Start Time	Left	Thru	Right	Peds	App. Total	Left	Thru	Right	Peds	App. Total	Left	Thru	Right	Peds	App. Total	Left	Thru	Right	Peds	App. Total	Int. Total
06:30 AM	0	0	0	2	2	7	24	9	8	48	5	72	8	2	87	0	0	0	0	0	137
06:45 AM	0	0	0	3	3	8	23	13	8	52	7	78	9	1	95	0	0	0	0	0	150
Total	0	0	0	5	5	15	47	22	16	100	12	150	17	3	182	0	0	0	0	0	287
07:00 AM	0	0	0	1	1	8	21	12	6	47	8	82	7	5	102	0	0	0	0	0	150
07:15 AM	0	0	0	2	2	6	21	14	10	51	15	105	4	7	131	0	0	0	0	0	184
07:30 AM	0	0	0	2	2	4	19	13	5	41	6	64	6	7	83	0	0	0	0	0	126
07:45 AM	0	0	0	3	3	8	31	19	4	62	5	85	4	7	101	0	0	0	0	0	166
Total	0	0	0	8	8	26	92	58	25	201	34	336	21	26	417	0	0	0	0	0	626
08:00 AM	0	0	0	0	0	6	27	14	5	52	17	91	8	8	124	0	0	0	0	0	176
08:15 AM	0	0	0	2	2	5	14	10	16	45	5	87	3	0	95	0	0	0	0	0	142
08:30 AM	0	0	0	0	0	9	30	18	11	68	4	52	8	4	68	0	0	0	0	0	136
08:45 AM	0	0	0	0	0	7	15	6	7	35	2	71	3	4	80	0	1	0	0	1	116
Total	0	0	0	2	2	27	86	48	39	200	28	301	22	16	367	0	1	0	0	1	570
Grand Total	0	0	0	15	15	68	225	128	80	501	74	787	60	45	966	0	1	0	0	1	1483
Apprch %	0	0	0	100		13.6	44.9	25.5	16		7.7	81.5	6.2	4.7		0	100	0	0		
Total %	0	0	0	1	1	4.6	15.2	8.6	5.4	33.8	5	53.1	4	3	65.1	0	0.1	0	0	0.1	
Car	0	0	0	15	15	66	191	112	80	449	59	754	53	45	911	0	1	0	0	1	1376
% Car	0	0	0	100	100	97.1	84.9	87.5	100	89.6	79.7	95.8	88.3	100	94.3	0	100	0	0	100	92.8
Light Truck	0	0	0	0	0	1	17	11	0	29	3	24	4	0	31	0	0	0	0	0	60
% Light Truck	0	0	0	0	0	1.5	7.6	8.6	0	5.8	4.1	3	6.7	0	3.2	0	0	0	0	0	4
Heavy Truck	0	0	0	0	0	1	17	5	0	23	12	9	3	0	24	0	0	0	0	0	47
% Heavy Truck	0	0	0	0	0	1.5	7.6	3.9	0	4.6	16.2	1.1	5	0	2.5	0	0	0	0	0	3.2

TechniQuest Corporation

4105 US Route 1, Suite # 14
Monmouth Junction, NJ 08852
Phone: 732-274-9500 Fax: 732-274-9510

File Name : 06-09AM-NB May08
Site Code : 9
Start Date : 5/15/2008
Page No : 2

	Garfield Avenue Southbound					Communipaw Avenue Westbound					Garfield Avenue Northbound					Eastbound					
Start Time	Left	Thru	Right	Peds	App. Total	Left	Thru	Right	Peds	App. Total	Left	Thru	Right	Peds	App. Total	Left	Thru	Right	Peds	App. Total	Int. Total
Peak Hour Analysis From 07:45 AM to 08:45 AM - Peak 1 of 1																					
Peak Hour for Entire Intersection Begins at 07:45 AM																					
07:45 AM	0	0	0	3	3	8	31	19	4	62	5	85	4	7	101	0	0	0	0	0	166
08:00 AM	0	0	0	0	0	6	27	14	5	52	17	91	8	8	124	0	0	0	0	0	176
08:15 AM	0	0	0	2	2	5	14	10	16	45	5	87	3	0	95	0	0	0	0	0	142
08:30 AM	0	0	0	0	0	9	30	18	11	68	4	52	8	4	68	0	0	0	0	0	136
Total Volume	0	0	0	5	5	28	102	61	36	227	31	315	23	19	388	0	0	0	0	0	620
% App. Total	0	0	0	100		12.3	44.9	26.9	15.9		8	81.2	5.9	4.9		0	0	0	0		
PHF	.000	.000	.000	.417	.417	.778	.823	.803	.563	.835	.456	.865	.719	.594	.782	.000	.000	.000	.000	.000	.881

TechniQuest Corporation

4105 US Route 1, Suite # 14
Monmouth Junction, NJ 08852
Phone: 732-274-9500 Fax: 732-274-9510

File Name : 06-09AM-NB May08
Site Code : 9
Start Date : 5/15/2008
Page No : 3

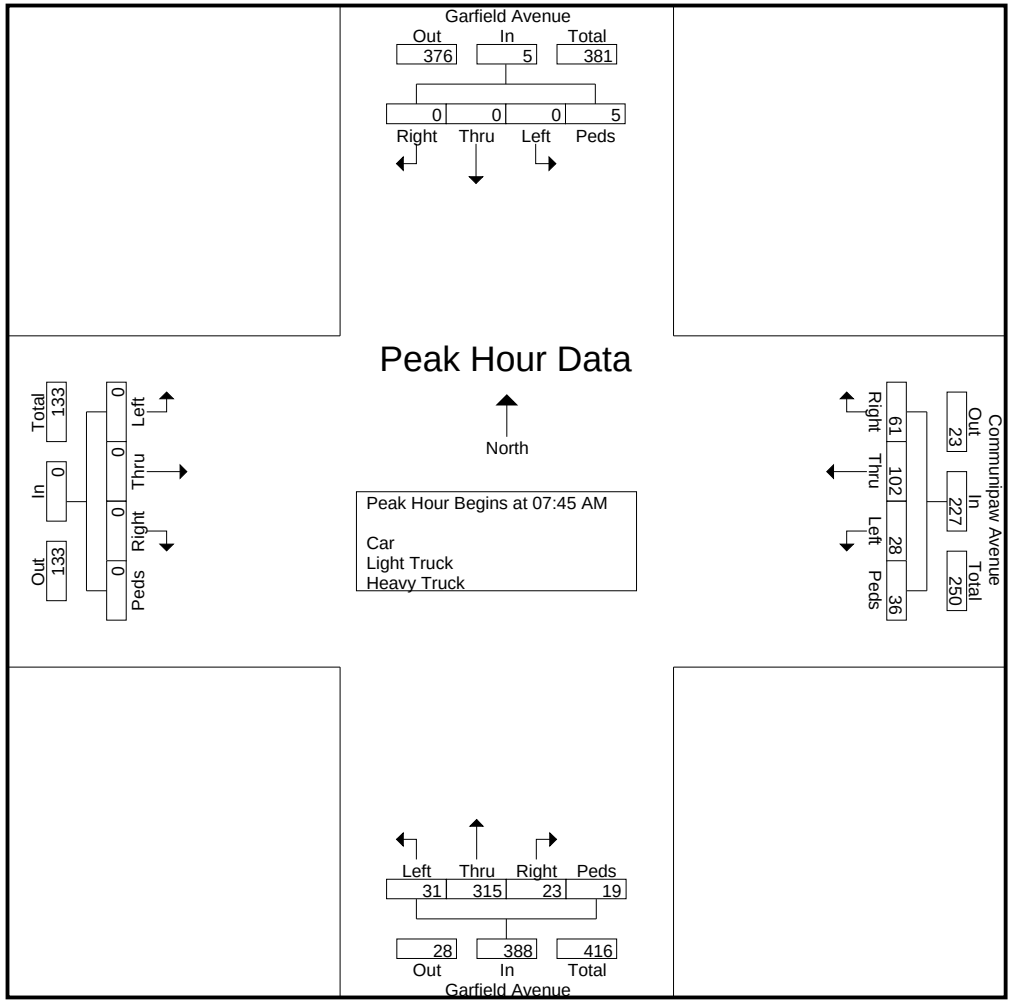

TechniQuest Corporation

4105 US Route 1, Suite # 14
Monmouth Junction, NJ 08852
Phone: 732-274-9500 Fax: 732-274-9510

File Name : 06-09AM-NB
Site Code : 9
Start Date : 5/15/2008
Page No : 1

Groups Printed- Car - Light Truck - Heavy Truck

	Garfield Avenue Southbound					Communipaw Avenue Westbound					Garfield Avenue Northbound					Eastbound					
Start Time	Left	Thru	Right	Peds	App. Total	Left	Thru	Right	Peds	App. Total	Left	Thru	Right	Peds	App. Total	Left	Thru	Right	Peds	App. Total	Int. Total
06:30 AM	0	0	0	2	2	7	24	9	8	48	5	72	8	2	87	0	0	0	0	0	137
06:45 AM	0	0	0	3	3	8	23	13	8	52	7	78	9	1	95	0	0	0	0	0	150
Total	0	0	0	5	5	15	47	22	16	100	12	150	17	3	182	0	0	0	0	0	287
07:00 AM	0	0	0	1	1	8	21	12	6	47	8	82	7	5	102	0	0	0	0	0	150
07:15 AM	0	0	0	2	2	6	21	14	10	51	15	105	4	7	131	0	0	0	0	0	184
07:30 AM	0	0	0	2	2	4	19	13	5	41	6	64	6	7	83	0	0	0	0	0	126
07:45 AM	0	0	0	3	3	8	31	19	4	62	5	85	4	7	101	0	0	0	0	0	166
Total	0	0	0	8	8	26	92	58	25	201	34	336	21	26	417	0	0	0	0	0	626
08:00 AM	0	0	0	0	0	6	27	14	5	52	17	91	8	8	124	0	0	0	0	0	176
08:15 AM	0	0	0	2	2	5	14	10	16	45	5	87	3	0	95	0	0	0	0	0	142
08:30 AM	0	0	0	0	0	9	30	18	11	68	4	52	8	4	68	0	0	0	0	0	136
08:45 AM	0	0	0	0	0	7	15	6	7	35	2	71	3	4	80	0	1	0	0	1	116
Total	0	0	0	2	2	27	86	48	39	200	28	301	22	16	367	0	1	0	0	1	570
Grand Total	0	0	0	15	15	68	225	128	80	501	74	787	60	45	966	0	1	0	0	1	1483
Apprch %	0	0	0	100		13.6	44.9	25.5	16		7.7	81.5	6.2	4.7		0	100	0	0		
Total %	0	0	0	1	1	4.6	15.2	8.6	5.4	33.8	5	53.1	4	3	65.1	0	0.1	0	0	0.1	
Car	0	0	0	15	15	66	191	112	80	449	59	754	53	45	911	0	1	0	0	1	1376
% Car	0	0	0	100	100	97.1	84.9	87.5	100	89.6	79.7	95.8	88.3	100	94.3	0	100	0	0	100	92.8
Light Truck	0	0	0	0	0	1	17	11	0	29	3	24	4	0	31	0	0	0	0	0	60
% Light Truck	0	0	0	0	0	1.5	7.6	8.6	0	5.8	4.1	3	6.7	0	3.2	0	0	0	0	0	4
Heavy Truck	0	0	0	0	0	1	17	5	0	23	12	9	3	0	24	0	0	0	0	0	47
% Heavy Truck	0	0	0	0	0	1.5	7.6	3.9	0	4.6	16.2	1.1	5	0	2.5	0	0	0	0	0	3.2

TechniQuest Corporation

4105 US Route 1, Suite # 14
Monmouth Junction, NJ 08852
Phone: 732-274-9500 Fax: 732-274-9510

File Name : 06-09AM-NB
Site Code : 9
Start Date : 5/15/2008
Page No : 2

	Garfield Avenue Southbound					Communipaw Avenue Westbound					Garfield Avenue Northbound					Eastbound					
Start Time	Left	Thru	Right	Peds	App. Total	Left	Thru	Right	Peds	App. Total	Left	Thru	Right	Peds	App. Total	Left	Thru	Right	Peds	App. Total	Int. Total
Peak Hour Analysis From 06:30 AM to 08:45 AM - Peak 1 of 1																					
Peak Hour for Entire Intersection Begins at 07:15 AM																					
07:15 AM	0	0	0	2	2	6	21	14	10	51	15	105	4	7	131	0	0	0	0	0	184
07:30 AM	0	0	0	2	2	4	19	13	5	41	6	64	6	7	83	0	0	0	0	0	126
07:45 AM	0	0	0	3	3	8	31	19	4	62	5	85	4	7	101	0	0	0	0	0	166
08:00 AM	0	0	0	0	0	6	27	14	5	52	17	91	8	8	124	0	0	0	0	0	176
Total Volume	0	0	0	7	7	24	98	60	24	206	43	345	22	29	439	0	0	0	0	0	652
% App. Total	0	0	0	100		11.7	47.6	29.1	11.7		9.8	78.6	5	6.6		0	0	0	0		
PHF	.000	.000	.000	.583	.583	.750	.790	.789	.600	.831	.632	.821	.688	.906	.838	.000	.000	.000	.000	.000	.886

TechniQuest Corporation

4105 US Route 1, Suite # 14
Monmouth Junction, NJ 08852
Phone: 732-274-9500 Fax: 732-274-9510

File Name : 06-09AM-NB
Site Code : 9
Start Date : 5/15/2008
Page No : 3

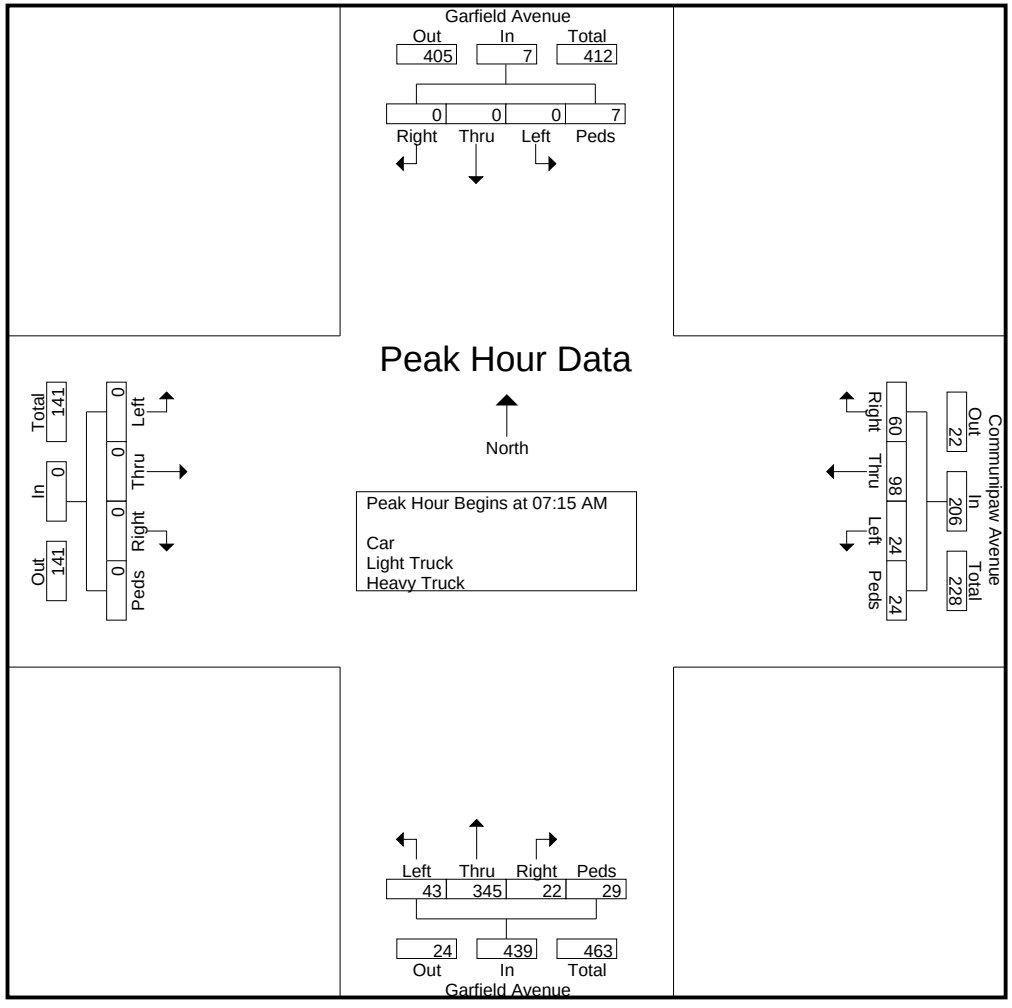

TechniQuest Corporation

4105 US Route 1, Suite # 14
Monmouth Junction, NJ 08852
Phone: 732-274-9500 Fax: 732-274-9510

File Name : 06-09AM-SB May08
Site Code : 9
Start Date : 5/15/2008
Page No : 1

Groups Printed- Car - Light Truck - Heavy Truck

	Summit Avenue Southbound					Westbound					Northbound					Communipaw Avenue Eastbound					
Start Time	Left	Thru	Right	RT to Communipaw Ave	App. Total	Left	Thru	Right	Peds at Summit Ave	App. Total	Left	Thru	Right	Peds	App. Total	Left	Thru	Right	Peds	App. Total	Int. Total
06:30 AM	2	7	42	0	51	0	0	0	0	0	0	0	0	0	0	8	23	19	5	55	106
06:45 AM	2	7	43	0	52	0	0	0	0	0	0	0	0	0	0	9	25	20	6	60	112
Total	4	14	85	0	103	0	0	0	0	0	0	0	0	0	0	17	48	39	11	115	218
07:00 AM	2	10	48	0	60	0	0	0	0	0	0	0	0	0	0	11	50	26	7	94	154
07:15 AM	0	9	47	1	57	0	0	0	0	0	0	0	0	0	0	21	46	18	4	89	146
07:30 AM	0	12	62	1	75	0	0	0	0	0	0	0	0	0	0	44	55	22	6	127	202
07:45 AM	0	15	83	0	98	0	0	0	0	0	0	0	0	0	0	77	59	28	10	174	272
Total	2	46	240	2	290	0	0	0	0	0	0	0	0	0	0	153	210	94	27	484	774
08:00 AM	0	13	96	1	110	0	0	0	0	0	0	0	0	0	0	74	54	24	8	160	270
08:15 AM	2	14	92	1	109	0	0	0	0	0	0	0	0	0	0	64	78	28	11	181	290
08:30 AM	0	12	100	0	112	0	0	0	0	0	0	0	0	0	0	43	79	25	8	155	267
08:45 AM	0	11	89	1	101	0	0	0	0	0	0	0	0	0	0	30	61	17	17	125	226
Total	2	50	377	3	432	0	0	0	0	0	0	0	0	0	0	211	272	94	44	621	1053
Grand Total	8	110	702	5	825	0	0	0	0	0	0	0	0	0	0	381	530	227	82	1220	2045
Apprch %	1	13.3	85.1	0.6		0	0	0	0		0	0	0	0		31.2	43.4	18.6	6.7		
Total %	0.4	5.4	34.3	0.2	40.3	0	0	0	0	0	0	0	0	0	0	18.6	25.9	11.1	4	59.7	
Car	5	101	688	5	799	0	0	0	0	0	0	0	0	0	0	377	498	210	82	1167	1966
% Car	62.5	91.8	98	100	96.8	0	0	0	0	0	0	0	0	0	0	99	94	92.5	100	95.7	96.1
Light Truck	3	7	7	0	17	0	0	0	0	0	0	0	0	0	0	4	21	6	0	31	48
% Light Truck	37.5	6.4	1	0	2.1	0	0	0	0	0	0	0	0	0	0	1	4	2.6	0	2.5	2.3
Heavy Truck	0	2	7	0	9	0	0	0	0	0	0	0	0	0	0	0	11	11	0	22	31
% Heavy Truck	0	1.8	1	0	1.1	0	0	0	0	0	0	0	0	0	0	0	2.1	4.8	0	1.8	1.5

TechniQuest Corporation

4105 US Route 1, Suite # 14
Monmouth Junction, NJ 08852
Phone: 732-274-9500 Fax: 732-274-9510

File Name : 06-09AM-SB May08
Site Code : 9
Start Date : 5/15/2008
Page No : 2

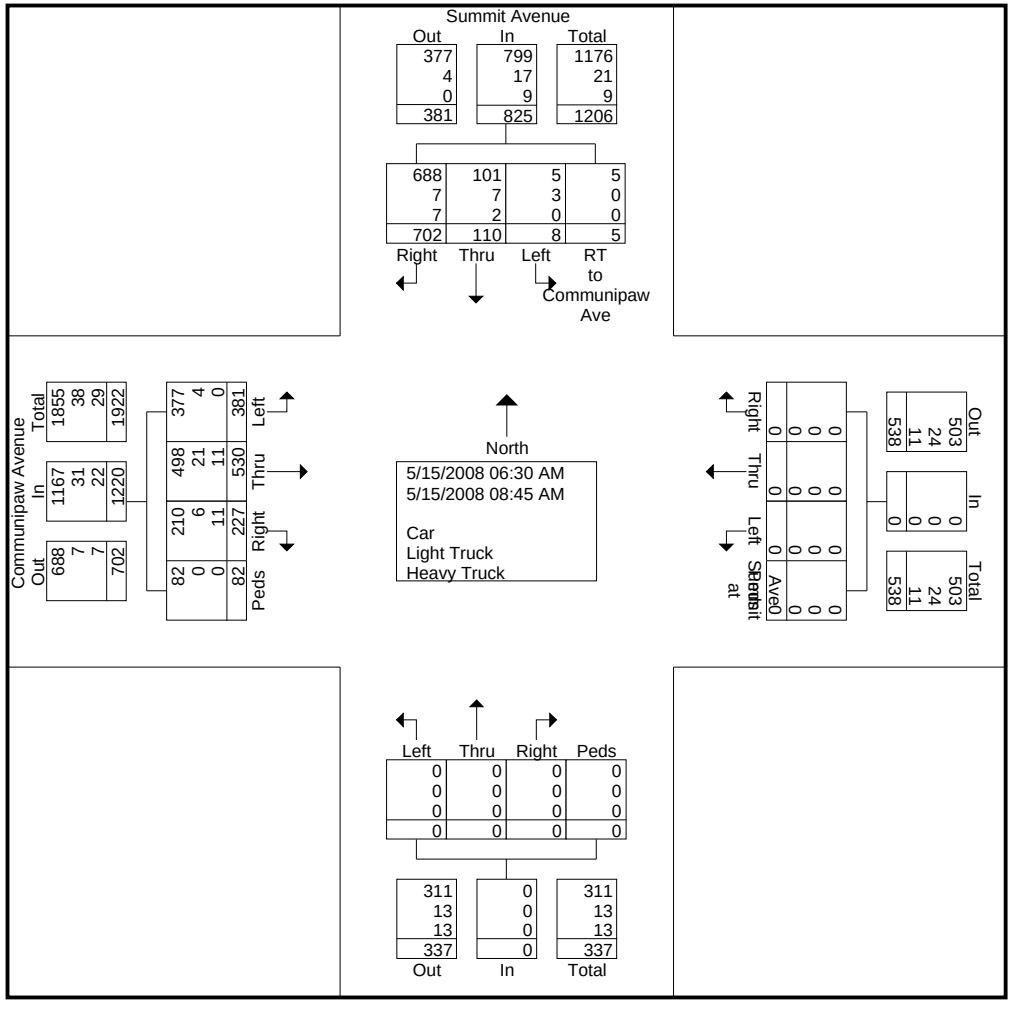

TechniQuest Corporation

4105 US Route 1, Suite # 14
Monmouth Junction, NJ 08852
Phone: 732-274-9500 Fax: 732-274-9510

File Name : 06-09AM-SB May08
Site Code : 9
Start Date : 5/15/2008
Page No : 3

	Summit Avenue Southbound					Westbound					Northbound					Communipaw Avenue Eastbound					
Start Time	Left	Thru	Right	RT to Communipaw Ave	App. Total	Left	Thru	Right	Peds at Summit Ave	App. Total	Left	Thru	Right	Peds	App. Total	Left	Thru	Right	Peds	App. Total	Int. Total
Peak Hour Analysis From 07:45 AM to 08:45 AM - Peak 1 of 1																					
Peak Hour for Entire Intersection Begins at 07:45 AM																					
07:45 AM	0	15	83	0	98	0	0	0	0	0	0	0	0	0	0	77	59	28	10	174	272
08:00 AM	0	13	96	1	110	0	0	0	0	0	0	0	0	0	0	74	54	24	8	160	270
08:15 AM	2	14	92	1	109	0	0	0	0	0	0	0	0	0	0	64	78	28	11	181	290
08:30 AM	0	12	100	0	112	0	0	0	0	0	0	0	0	0	0	43	79	25	8	155	267
Total Volume	2	54	371	2	429	0	0	0	0	0	0	0	0	0	0	258	270	105	37	670	1099
% App. Total	0.5	12.6	86.5	0.5		0	0	0	0		0	0	0	0		38.5	40.3	15.7	5.5		
PHF	.250	.900	.928	.500	.958	.000	.000	.000	.000	.000	.000	.000	.000	.000	.000	.838	.854	.938	.841	.925	.947

TechniQuest Corporation

4105 US Route 1, Suite # 14
Monmouth Junction, NJ 08852
Phone: 732-274-9500 Fax: 732-274-9510

File Name : 06-09AM-SB May08
Site Code : 9
Start Date : 5/15/2008
Page No : 4

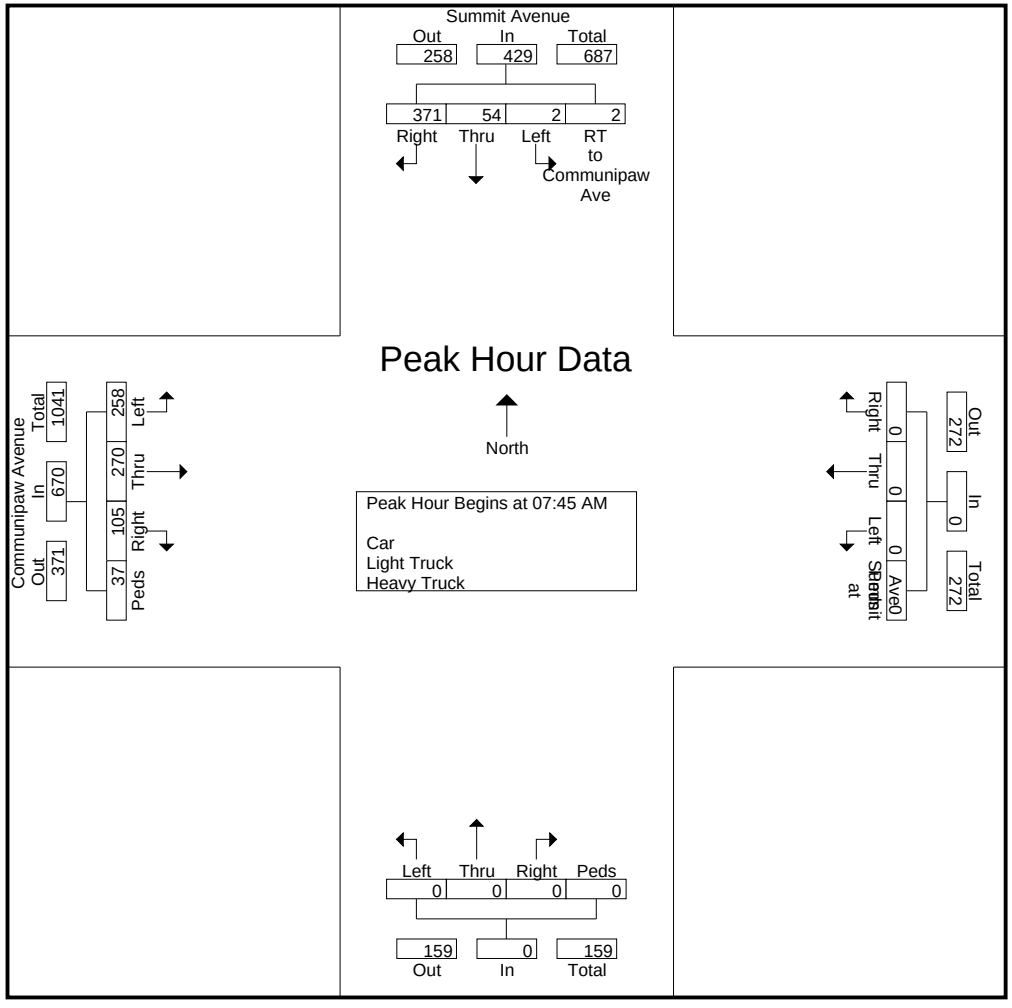

TechniQuest Corporation

4105 US Route 1, Suite # 14
Monmouth Junction, NJ 08852
Phone: 732-274-9500 Fax: 732-274-9510

File Name : 06-09AM-SB
Site Code : 9
Start Date : 5/15/2008
Page No : 1

Groups Printed- Car - Light Truck - Heavy Truck

	Summit Avenue Southbound					Westbound					Northbound					Communipaw Avenue Eastbound					
Start Time	Left	Thru	Right	RT to Communipaw Ave	App. Total	Left	Thru	Right	Peds at Summit Ave	App. Total	Left	Thru	Right	Peds	App. Total	Left	Thru	Right	Peds	App. Total	Int. Total
06:30 AM	2	7	42	0	51	0	0	0	0	0	0	0	0	0	0	8	23	19	5	55	106
06:45 AM	2	7	43	0	52	0	0	0	0	0	0	0	0	0	0	9	25	20	6	60	112
Total	4	14	85	0	103	0	0	0	0	0	0	0	0	0	0	17	48	39	11	115	218
07:00 AM	2	10	48	0	60	0	0	0	0	0	0	0	0	0	0	11	50	26	7	94	154
07:15 AM	0	9	47	1	57	0	0	0	0	0	0	0	0	0	0	21	46	18	4	89	146
07:30 AM	0	12	62	1	75	0	0	0	0	0	0	0	0	0	0	44	55	22	6	127	202
07:45 AM	0	15	83	0	98	0	0	0	0	0	0	0	0	0	0	77	59	28	10	174	272
Total	2	46	240	2	290	0	0	0	0	0	0	0	0	0	0	153	210	94	27	484	774
08:00 AM	0	13	96	1	110	0	0	0	0	0	0	0	0	0	0	74	54	24	8	160	270
08:15 AM	2	14	92	1	109	0	0	0	0	0	0	0	0	0	0	64	78	28	11	181	290
08:30 AM	0	12	100	0	112	0	0	0	0	0	0	0	0	0	0	43	79	25	8	155	267
08:45 AM	0	11	89	1	101	0	0	0	0	0	0	0	0	0	0	30	61	17	17	125	226
Total	2	50	377	3	432	0	0	0	0	0	0	0	0	0	0	211	272	94	44	621	1053
Grand Total	8	110	702	5	825	0	0	0	0	0	0	0	0	0	0	381	530	227	82	1220	2045
Apprch %	1	13.3	85.1	0.6		0	0	0	0		0	0	0	0		31.2	43.4	18.6	6.7		
Total %	0.4	5.4	34.3	0.2	40.3	0	0	0	0	0	0	0	0	0	0	18.6	25.9	11.1	4	59.7	
Car	5	101	688	5	799	0	0	0	0	0	0	0	0	0	0	377	498	210	82	1167	1966
% Car	62.5	91.8	98	100	96.8	0	0	0	0	0	0	0	0	0	0	99	94	92.5	100	95.7	96.1
Light Truck	3	7	7	0	17	0	0	0	0	0	0	0	0	0	0	4	21	6	0	31	48
% Light Truck	37.5	6.4	1	0	2.1	0	0	0	0	0	0	0	0	0	0	1	4	2.6	0	2.5	2.3
Heavy Truck	0	2	7	0	9	0	0	0	0	0	0	0	0	0	0	0	11	11	0	22	31
% Heavy Truck	0	1.8	1	0	1.1	0	0	0	0	0	0	0	0	0	0	0	2.1	4.8	0	1.8	1.5

TechniQuest Corporation

4105 US Route 1, Suite # 14
Monmouth Junction, NJ 08852
Phone: 732-274-9500 Fax: 732-274-9510

File Name : 06-09AM-SB
Site Code : 9
Start Date : 5/15/2008
Page No : 2

	Summit Avenue Southbound					Westbound					Northbound					Communipaw Avenue Eastbound					
Start Time	Left	Thru	Right	RT to Communipaw Ave	App. Total	Left	Thru	Right	Peds at Summit Ave	App. Total	Left	Thru	Right	Peds	App. Total	Left	Thru	Right	Peds	App. Total	Int. Total
Peak Hour Analysis From 06:30 AM to 08:45 AM - Peak 1 of 1																					
Peak Hour for Entire Intersection Begins at 07:45 AM																					
07:45 AM	0	15	83	0	98	0	0	0	0	0	0	0	0	0	0	77	59	28	10	174	272
08:00 AM	0	13	96	1	110	0	0	0	0	0	0	0	0	0	0	74	54	24	8	160	270
08:15 AM	2	14	92	1	109	0	0	0	0	0	0	0	0	0	0	64	78	28	11	181	290
08:30 AM	0	12	100	0	112	0	0	0	0	0	0	0	0	0	0	43	79	25	8	155	267
Total Volume	2	54	371	2	429	0	0	0	0	0	0	0	0	0	0	258	270	105	37	670	1099
% App. Total	0.5	12.6	86.5	0.5		0	0	0	0		0	0	0	0		38.5	40.3	15.7	5.5		
PHF	.250	.900	.928	.500	.958	.000	.000	.000	.000	.000	.000	.000	.000	.000	.000	.838	.854	.938	.841	.925	.947

TechniQuest Corporation

4105 US Route 1, Suite # 14
Monmouth Junction, NJ 08852
Phone: 732-274-9500 Fax: 732-274-9510

File Name : 06-09AM-SB
Site Code : 9
Start Date : 5/15/2008
Page No : 3

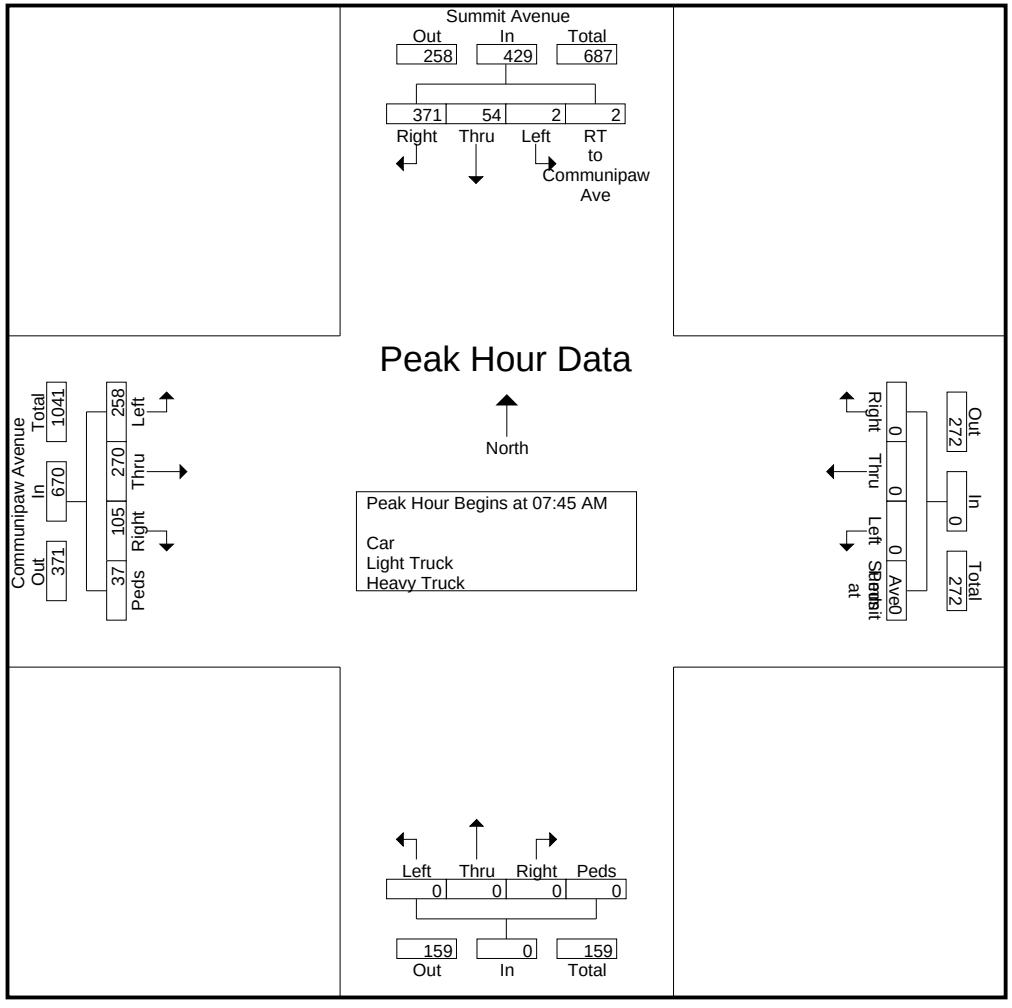

TechniQuest Corporation

4105 US Route 1, Suite # 14
Monmouth Junction, NJ 08852
Phone: 732-274-9500 Fax: 732-274-9510

File Name : 06-09PM-NB May08
Site Code : 9
Start Date : 5/15/2008
Page No : 1

Groups Printed- Car - Light Truck - Heavy Truck

	Garfield Avenue Southbound					Communipaw Avenue Westbound					Garfield Avenue Northbound					Eastbound					
Start Time	Left	Thru	Right	Peds	App. Total	Left	Thru	Right	Peds	App. Total	Left	Thru	Right	Peds	App. Total	Left	Thru	Right	Peds	App. Total	Int. Total
04:00 PM	0	0	0	2	2	12	33	10	4	59	8	42	2	3	55	0	0	0	0	0	116
04:15 PM	0	0	0	1	1	13	41	16	2	72	15	69	6	6	96	0	0	0	0	0	169
04:30 PM	0	0	0	3	3	22	47	20	9	98	14	54	8	2	78	0	0	0	0	0	179
04:45 PM	0	0	0	4	4	16	46	25	5	92	14	81	6	5	106	0	0	0	0	0	202
Total	0	0	0	10	10	63	167	71	20	321	51	246	22	16	335	0	0	0	0	0	666
05:00 PM	0	0	0	3	3	21	48	15	5	89	18	90	6	1	115	0	0	0	0	0	207
05:15 PM	0	0	0	2	2	15	56	7	1	79	12	73	7	0	92	0	0	0	0	0	173
05:30 PM	0	0	0	3	3	16	41	11	3	71	8	57	8	1	74	0	0	0	0	0	148
05:45 PM	0	0	0	2	2	21	47	6	1	75	10	46	5	7	68	0	0	0	0	0	145
Total	0	0	0	10	10	73	192	39	10	314	48	266	26	9	349	0	0	0	0	0	673
06:00 PM	0	0	0	1	1	15	41	14	10	80	18	51	4	0	73	0	0	0	0	0	154
06:15 PM	0	0	0	2	2	5	37	8	7	57	15	59	10	2	86	0	0	0	0	0	145
Grand Total	0	0	0	23	23	156	437	132	47	772	132	622	62	27	843	0	0	0	0	0	1638
Apprch %	0	0	0	100		20.2	56.6	17.1	6.1		15.7	73.8	7.4	3.2		0	0	0	0		
Total %	0	0	0	1.4	1.4	9.5	26.7	8.1	2.9	47.1	8.1	38	3.8	1.6	51.5	0	0	0	0	0	
Car	0	0	0	23	23	155	416	129	47	747	119	597	60	27	803	0	0	0	0	0	1573
% Car	0	0	0	100	100	99.4	95.2	97.7	100	96.8	90.2	96	96.8	100	95.3	0	0	0	0	0	96
Light Truck	0	0	0	0	0	0	17	2	0	19	4	14	0	0	18	0	0	0	0	0	37
% Light Truck	0	0	0	0	0	0	3.9	1.5	0	2.5	3	2.3	0	0	2.1	0	0	0	0	0	2.3
Heavy Truck	0	0	0	0	0	1	4	1	0	6	9	11	2	0	22	0	0	0	0	0	28
% Heavy Truck	0	0	0	0	0	0.6	0.9	0.8	0	0.8	6.8	1.8	3.2	0	2.6	0	0	0	0	0	1.7

TechniQuest Corporation

4105 US Route 1, Suite # 14
Monmouth Junction, NJ 08852
Phone: 732-274-9500 Fax: 732-274-9510

File Name : 06-09PM-NB May08
Site Code : 9
Start Date : 5/15/2008
Page No : 2

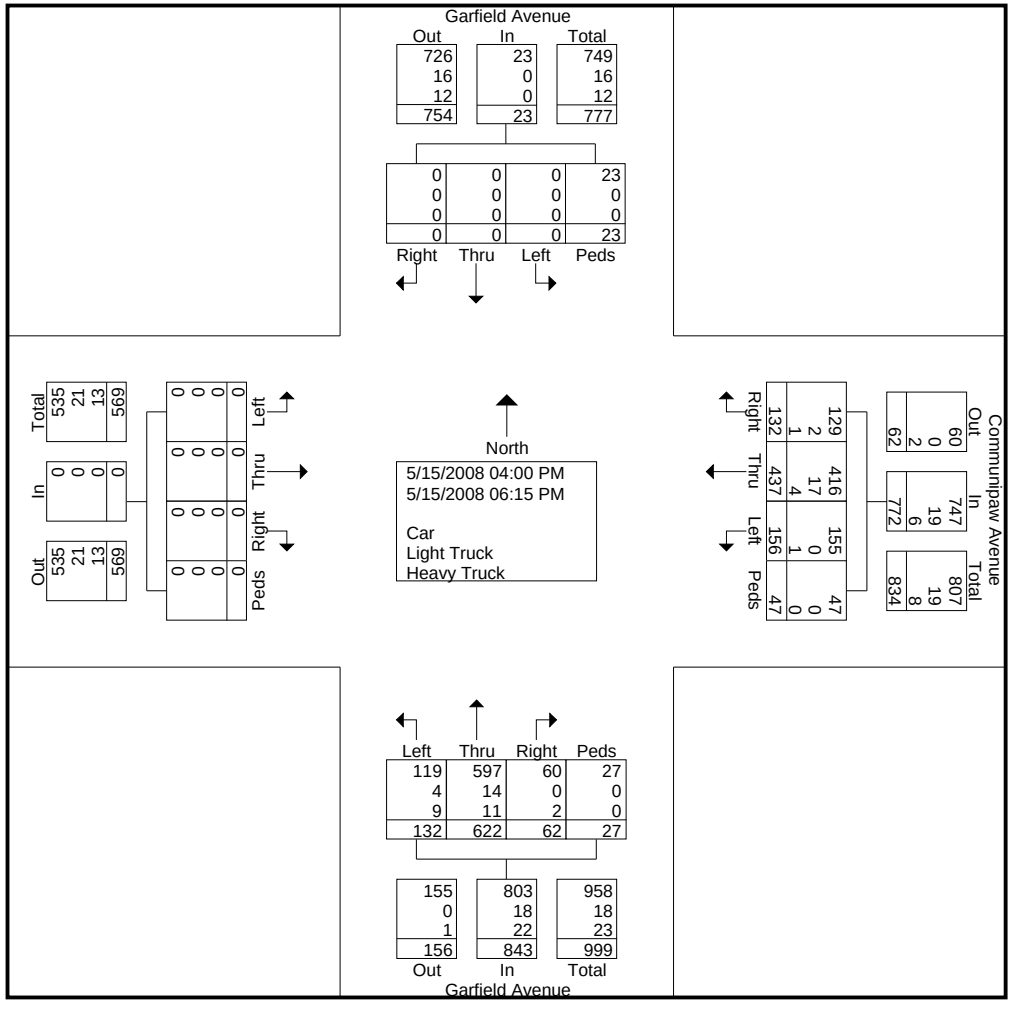

TechniQuest Corporation

4105 US Route 1, Suite # 14
Monmouth Junction, NJ 08852
Phone: 732-274-9500 Fax: 732-274-9510

File Name : 06-09PM-NB May08
Site Code : 9
Start Date : 5/15/2008
Page No : 3

	Garfield Avenue Southbound					Communipaw Avenue Westbound					Garfield Avenue Northbound					Eastbound					
Start Time	Left	Thru	Right	Peds	App. Total	Left	Thru	Right	Peds	App. Total	Left	Thru	Right	Peds	App. Total	Left	Thru	Right	Peds	App. Total	Int. Total
Peak Hour Analysis From 05:00 PM to 06:00 PM - Peak 1 of 1																					
Peak Hour for Entire Intersection Begins at 05:00 PM																					
05:00 PM	0	0	0	3	3	21	48	15	5	89	18	90	6	1	115	0	0	0	0	0	207
05:15 PM	0	0	0	2	2	15	56	7	1	79	12	73	7	0	92	0	0	0	0	0	173
05:30 PM	0	0	0	3	3	16	41	11	3	71	8	57	8	1	74	0	0	0	0	0	148
05:45 PM	0	0	0	2	2	21	47	6	1	75	10	46	5	7	68	0	0	0	0	0	145
Total Volume	0	0	0	10	10	73	192	39	10	314	48	266	26	9	349	0	0	0	0	0	673
% App. Total	0	0	0	100		23.2	61.1	12.4	3.2		13.8	76.2	7.4	2.6		0	0	0	0		
PHF	.000	.000	.000	.833	.833	.869	.857	.650	.500	.882	.667	.739	.813	.321	.759	.000	.000	.000	.000	.000	.813

TechniQuest Corporation

4105 US Route 1, Suite # 14
Monmouth Junction, NJ 08852
Phone: 732-274-9500 Fax: 732-274-9510

File Name : 06-09PM-NB May08
Site Code : 9
Start Date : 5/15/2008
Page No : 4

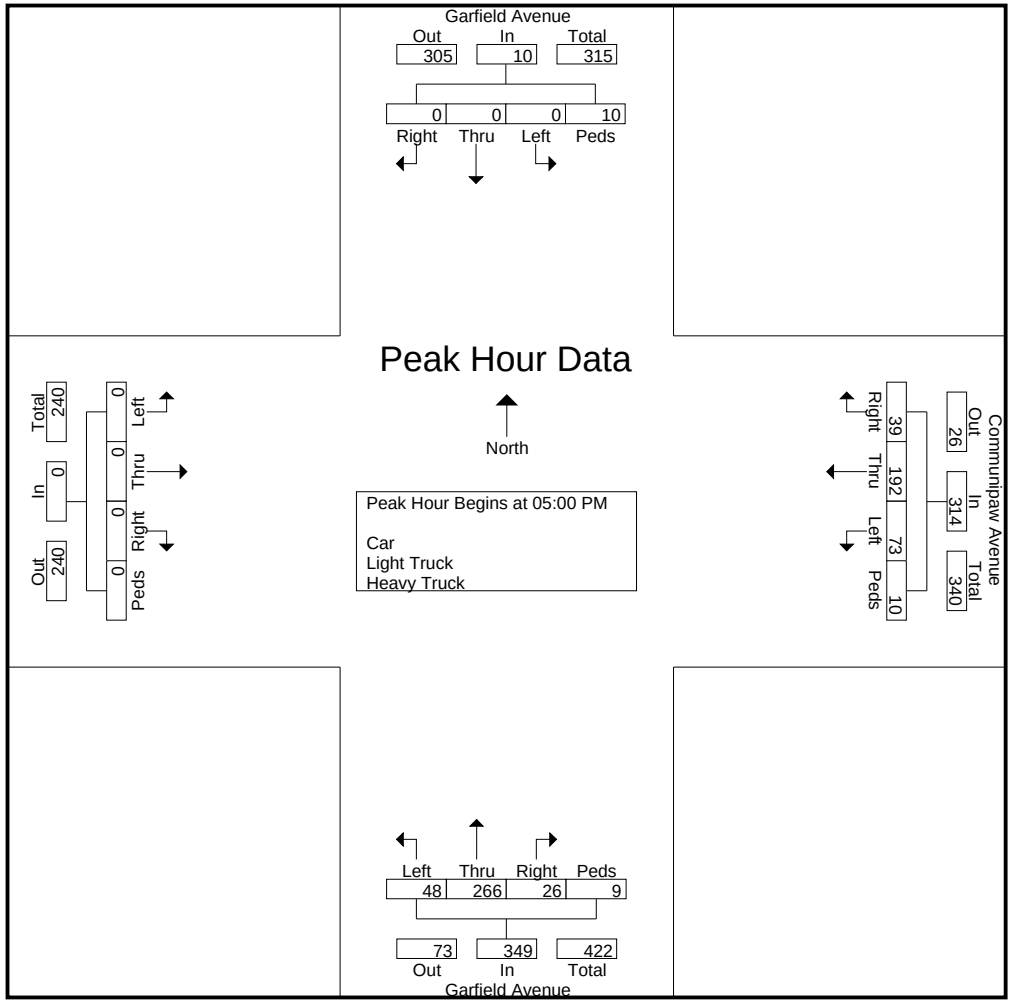

TechniQuest Corporation

4105 US Route 1, Suite # 14
Monmouth Junction, NJ 08852
Phone: 732-274-9500 Fax: 732-274-9510

File Name : 06-09PM-NB
Site Code : 9
Start Date : 5/15/2008
Page No : 1

Groups Printed- Car - Light Truck - Heavy Truck

	Garfield Avenue Southbound					Communipaw Avenue Westbound					Garfield Avenue Northbound					Eastbound					
Start Time	Left	Thru	Right	Peds	App. Total	Left	Thru	Right	Peds	App. Total	Left	Thru	Right	Peds	App. Total	Left	Thru	Right	Peds	App. Total	Int. Total
04:00 PM	0	0	0	2	2	12	33	10	4	59	8	42	2	3	55	0	0	0	0	0	116
04:15 PM	0	0	0	1	1	13	41	16	2	72	15	69	6	6	96	0	0	0	0	0	169
04:30 PM	0	0	0	3	3	22	47	20	9	98	14	54	8	2	78	0	0	0	0	0	179
04:45 PM	0	0	0	4	4	16	46	25	5	92	14	81	6	5	106	0	0	0	0	0	202
Total	0	0	0	10	10	63	167	71	20	321	51	246	22	16	335	0	0	0	0	0	666
05:00 PM	0	0	0	3	3	21	48	15	5	89	18	90	6	1	115	0	0	0	0	0	207
05:15 PM	0	0	0	2	2	15	56	7	1	79	12	73	7	0	92	0	0	0	0	0	173
05:30 PM	0	0	0	3	3	16	41	11	3	71	8	57	8	1	74	0	0	0	0	0	148
05:45 PM	0	0	0	2	2	21	47	6	1	75	10	46	5	7	68	0	0	0	0	0	145
Total	0	0	0	10	10	73	192	39	10	314	48	266	26	9	349	0	0	0	0	0	673
06:00 PM	0	0	0	1	1	15	41	14	10	80	18	51	4	0	73	0	0	0	0	0	154
06:15 PM	0	0	0	2	2	5	37	8	7	57	15	59	10	2	86	0	0	0	0	0	145
Grand Total	0	0	0	23	23	156	437	132	47	772	132	622	62	27	843	0	0	0	0	0	1638
Apprch %	0	0	0	100		20.2	56.6	17.1	6.1		15.7	73.8	7.4	3.2		0	0	0	0		
Total %	0	0	0	1.4	1.4	9.5	26.7	8.1	2.9	47.1	8.1	38	3.8	1.6	51.5	0	0	0	0	0	
Car	0	0	0	23	23	155	416	129	47	747	119	597	60	27	803	0	0	0	0	0	1573
% Car	0	0	0	100	100	99.4	95.2	97.7	100	96.8	90.2	96	96.8	100	95.3	0	0	0	0	0	96
Light Truck	0	0	0	0	0	0	17	2	0	19	4	14	0	0	18	0	0	0	0	0	37
% Light Truck	0	0	0	0	0	0	3.9	1.5	0	2.5	3	2.3	0	0	2.1	0	0	0	0	0	2.3
Heavy Truck	0	0	0	0	0	1	4	1	0	6	9	11	2	0	22	0	0	0	0	0	28
% Heavy Truck	0	0	0	0	0	0.6	0.9	0.8	0	0.8	6.8	1.8	3.2	0	2.6	0	0	0	0	0	1.7

TechniQuest Corporation

4105 US Route 1, Suite # 14
Monmouth Junction, NJ 08852
Phone: 732-274-9500 Fax: 732-274-9510

File Name : 06-09PM-NB
Site Code : 9
Start Date : 5/15/2008
Page No : 2

	Garfield Avenue Southbound					Communipaw Avenue Westbound					Garfield Avenue Northbound					Eastbound					
Start Time	Left	Thru	Right	Peds	App. Total	Left	Thru	Right	Peds	App. Total	Left	Thru	Right	Peds	App. Total	Left	Thru	Right	Peds	App. Total	Int. Total
Peak Hour Analysis From 04:00 PM to 06:15 PM - Peak 1 of 1																					
Peak Hour for Entire Intersection Begins at 04:30 PM																					
04:30 PM	0	0	0	3	3	22	47	20	9	98	14	54	8	2	78	0	0	0	0	0	179
04:45 PM	0	0	0	4	4	16	46	25	5	92	14	81	6	5	106	0	0	0	0	0	202
05:00 PM	0	0	0	3	3	21	48	15	5	89	18	90	6	1	115	0	0	0	0	0	207
05:15 PM	0	0	0	2	2	15	56	7	1	79	12	73	7	0	92	0	0	0	0	0	173
Total Volume	0	0	0	12	12	74	197	67	20	358	58	298	27	8	391	0	0	0	0	0	761
% App. Total	0	0	0	100		20.7	55	18.7	5.6		14.8	76.2	6.9	2		0	0	0	0		
PHF	.000	.000	.000	.750	.750	.841	.879	.670	.556	.913	.806	.828	.844	.400	.850	.000	.000	.000	.000	.000	.919

TechniQuest Corporation

4105 US Route 1, Suite # 14
Monmouth Junction, NJ 08852
Phone: 732-274-9500 Fax: 732-274-9510

File Name : 06-09PM-NB
Site Code : 9
Start Date : 5/15/2008
Page No : 3

Peak Hour Data

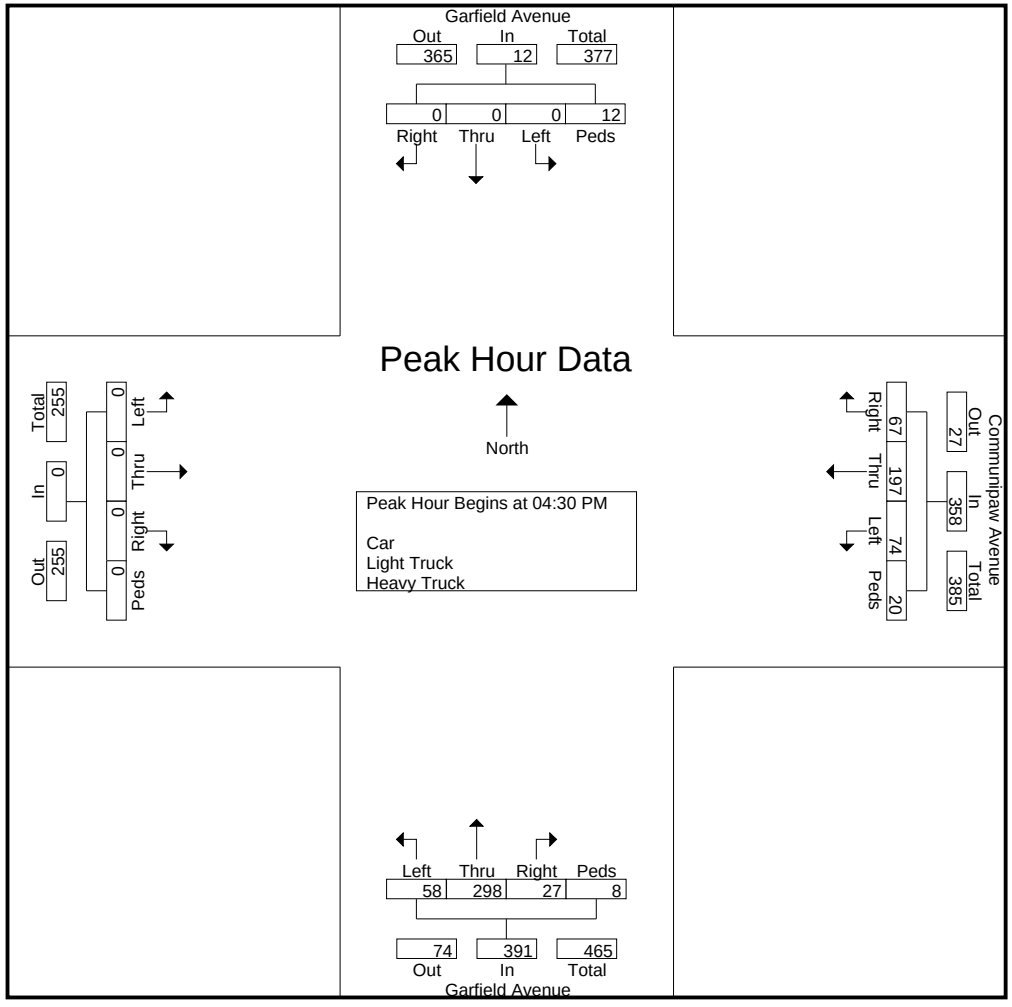

TechniQuest Corporation

4105 US Route 1, Suite # 14
Monmouth Junction, NJ 08852
Phone: 732-274-9500 Fax: 732-274-9510

File Name : 06-09PM-SB May08
Site Code : 9
Start Date : 5/15/2008
Page No : 1

Groups Printed- Car - Light Truck - Heavy Truck

	Summit Avenue Southbound					Westbound					Northbound					Communipaw Avenue Eastbound					
Start Time	Left	Thru	Right	RT to Communipaw Ave	App. Total	Left	Thru	Right	Peds	App. Total	Left	Thru	Right	Peds	App. Total	Left	Thru	Right	Peds	App. Total	Int. Total
04:00 PM	0	13	99	1	113	0	0	0	0	0	0	0	0	0	0	8	40	18	3	69	182
04:15 PM	0	14	103	2	119	0	0	0	0	0	0	0	0	0	0	9	42	20	9	80	199
04:30 PM	0	13	104	1	118	0	0	0	0	0	0	0	0	0	0	25	54	22	5	106	224
04:45 PM	0	18	110	2	130	0	0	0	0	0	0	0	0	0	0	21	56	22	13	112	242
Total	0	58	416	6	480	0	0	0	0	0	0	0	0	0	0	63	192	82	30	367	847
05:00 PM	0	10	108	0	118	0	0	0	0	0	0	0	0	0	0	18	39	32	14	103	221
05:15 PM	1	8	119	2	130	0	0	0	0	0	0	0	0	0	0	12	62	27	7	108	238
05:30 PM	0	15	107	1	123	0	0	0	0	0	0	0	0	0	0	20	46	20	10	96	219
05:45 PM	1	16	119	2	138	0	0	0	0	0	0	0	0	0	0	17	53	18	5	93	231
Total	2	49	453	5	509	0	0	0	0	0	0	0	0	0	0	67	200	97	36	400	909
06:00 PM	0	12	93	6	111	0	0	0	0	0	0	0	0	0	0	15	49	16	13	93	204
06:15 PM	0	9	93	3	105	0	0	0	0	0	0	0	0	0	0	17	51	24	7	99	204
Grand Total	2	128	1055	20	1205	0	0	0	0	0	0	0	0	0	0	162	492	219	86	959	2164
Apprch %	0.2	10.6	87.6	1.7		0	0	0	0		0	0	0	0		16.9	51.3	22.8	9		
Total %	0.1	5.9	48.8	0.9	55.7	0	0	0	0	0	0	0	0	0	0	7.5	22.7	10.1	4	44.3	
Car	1	127	1049	20	1197	0	0	0	0	0	0	0	0	0	0	157	471	208	86	922	2119
% Car	50	99.2	99.4	100	99.3	0	0	0	0	0	0	0	0	0	0	96.9	95.7	95	100	96.1	97.9
Light Truck	1	1	3	0	5	0	0	0	0	0	0	0	0	0	0	5	20	8	0	33	38
% Light Truck	50	0.8	0.3	0	0.4	0	0	0	0	0	0	0	0	0	0	3.1	4.1	3.7	0	3.4	1.8
Heavy Truck	0	0	3	0	3	0	0	0	0	0	0	0	0	0	0	0	1	3	0	4	7
% Heavy Truck	0	0	0.3	0	0.2	0	0	0	0	0	0	0	0	0	0	0	0.2	1.4	0	0.4	0.3

TechniQuest Corporation

4105 US Route 1, Suite # 14
Monmouth Junction, NJ 08852
Phone: 732-274-9500 Fax: 732-274-9510

File Name : 06-09PM-SB May08
Site Code : 9
Start Date : 5/15/2008
Page No : 2

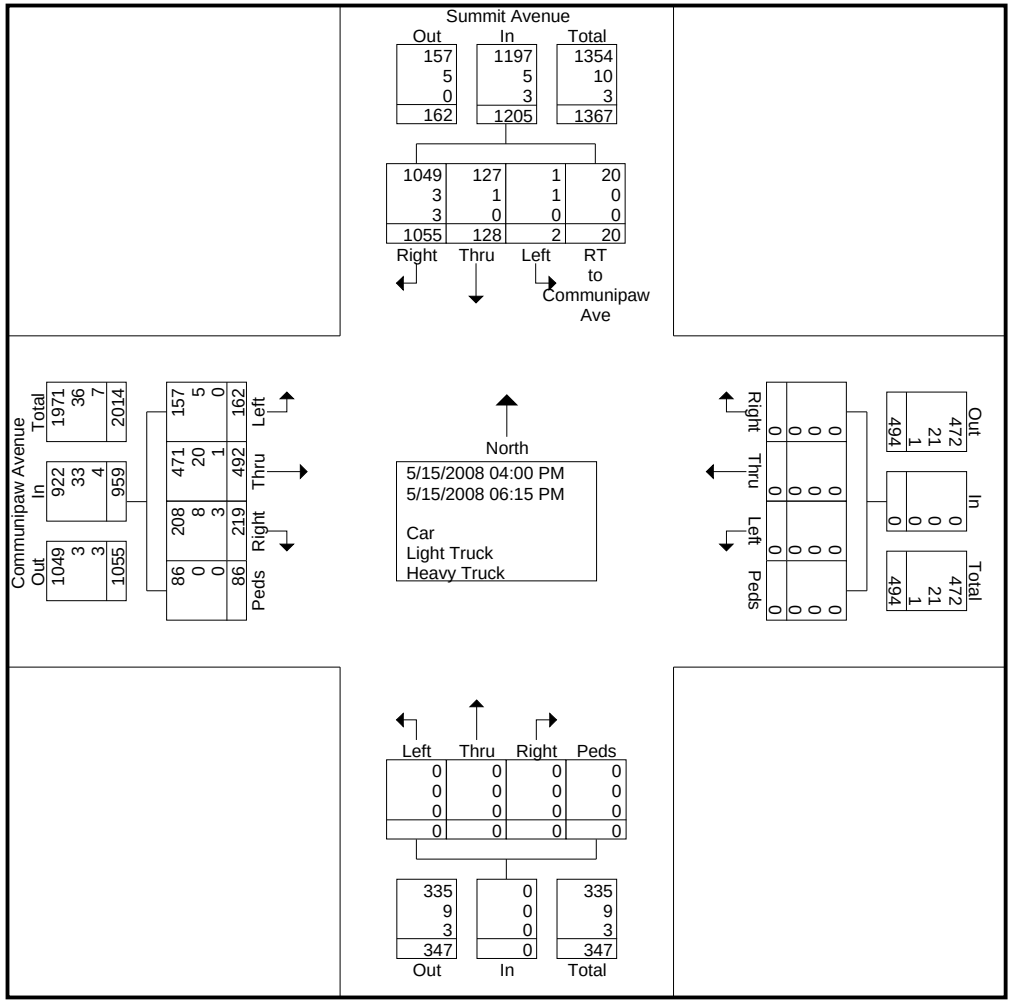

TechniQuest Corporation

4105 US Route 1, Suite # 14
Monmouth Junction, NJ 08852
Phone: 732-274-9500 Fax: 732-274-9510

File Name : 06-09PM-SB May08
Site Code : 9
Start Date : 5/15/2008
Page No : 3

	Summit Avenue Southbound					Westbound					Northbound					Communipaw Avenue Eastbound					
Start Time	Left	Thru	Right	RT to Communipaw Ave	App. Total	Left	Thru	Right	Peds	App. Total	Left	Thru	Right	Peds	App. Total	Left	Thru	Right	Peds	App. Total	Int. Total
Peak Hour Analysis From 05:00 PM to 06:00 PM - Peak 1 of 1																					
Peak Hour for Entire Intersection Begins at 05:00 PM																					
05:00 PM	0	10	108	0	118	0	0	0	0	0	0	0	0	0	0	18	39	32	14	103	221
05:15 PM	1	8	119	2	130	0	0	0	0	0	0	0	0	0	0	12	62	27	7	108	238
05:30 PM	0	15	107	1	123	0	0	0	0	0	0	0	0	0	0	20	46	20	10	96	219
05:45 PM	1	16	119	2	138	0	0	0	0	0	0	0	0	0	0	17	53	18	5	93	231
Total Volume	2	49	453	5	509	0	0	0	0	0	0	0	0	0	0	67	200	97	36	400	909
% App. Total	0.4	9.6	89	1		0	0	0	0		0	0	0	0		16.8	50	24.2	9		
PHF	.500	.766	.952	.625	.922	.000	.000	.000	.000	.000	.000	.000	.000	.000	.000	.838	.806	.758	.643	.926	.955

TechniQuest Corporation

4105 US Route 1, Suite # 14
Monmouth Junction, NJ 08852
Phone: 732-274-9500 Fax: 732-274-9510

File Name : 06-09PM-SB May08
Site Code : 9
Start Date : 5/15/2008
Page No : 4

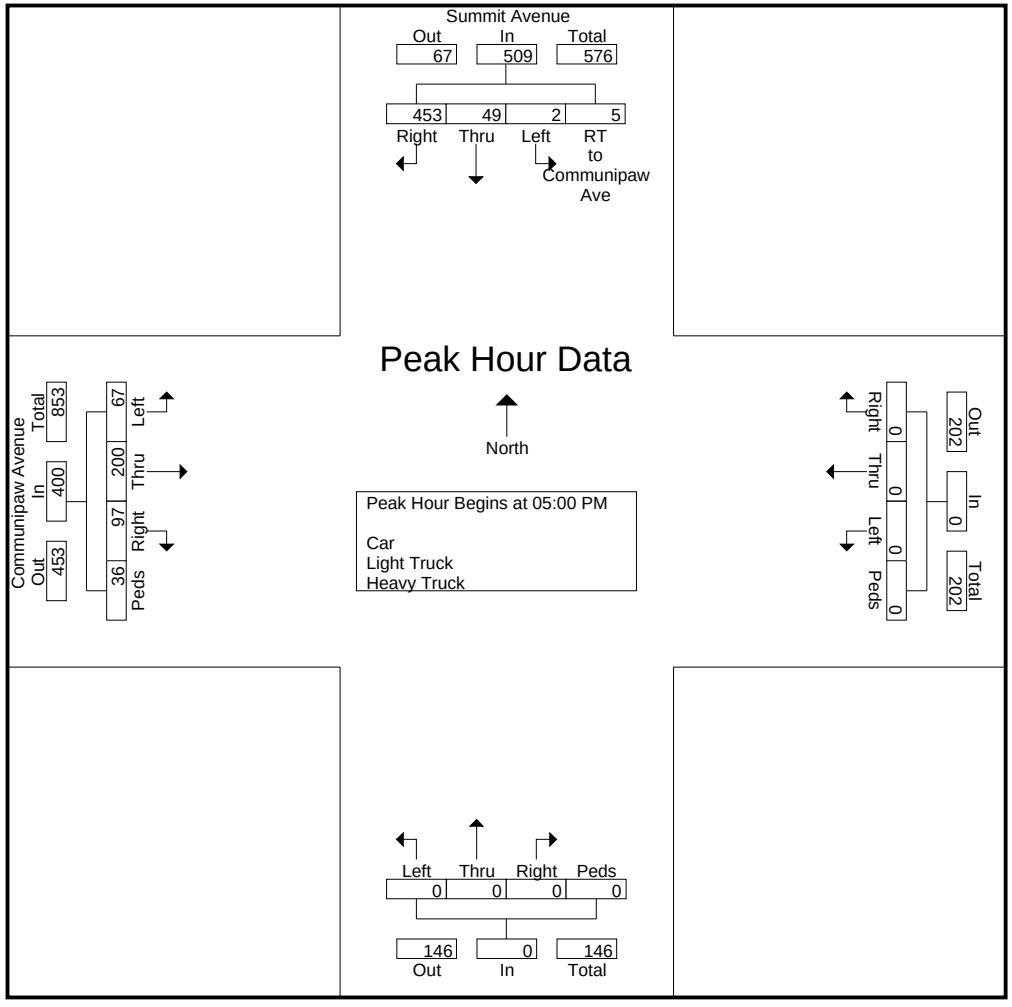

TechniQuest Corporation

4105 US Route 1, Suite # 14
Monmouth Junction, NJ 08852
Phone: 732-274-9500 Fax: 732-274-9510

File Name : 06-09PM-SB
Site Code : 9
Start Date : 5/15/2008
Page No : 1

Groups Printed- Car - Light Truck - Heavy Truck

	Summit Avenue Southbound					Westbound					Northbound					Communipaw Avenue Eastbound					
Start Time	Left	Thru	Right	RT to Communipaw Ave	App. Total	Left	Thru	Right	Peds	App. Total	Left	Thru	Right	Peds	App. Total	Left	Thru	Right	Peds	App. Total	Int. Total
04:00 PM	0	13	99	1	113	0	0	0	0	0	0	0	0	0	0	8	40	18	3	69	182
04:15 PM	0	14	103	2	119	0	0	0	0	0	0	0	0	0	0	9	42	20	9	80	199
04:30 PM	0	13	104	1	118	0	0	0	0	0	0	0	0	0	0	25	54	22	5	106	224
04:45 PM	0	18	110	2	130	0	0	0	0	0	0	0	0	0	0	21	56	22	13	112	242
Total	0	58	416	6	480	0	0	0	0	0	0	0	0	0	0	63	192	82	30	367	847
05:00 PM	0	10	108	0	118	0	0	0	0	0	0	0	0	0	0	18	39	32	14	103	221
05:15 PM	1	8	119	2	130	0	0	0	0	0	0	0	0	0	0	12	62	27	7	108	238
05:30 PM	0	15	107	1	123	0	0	0	0	0	0	0	0	0	0	20	46	20	10	96	219
05:45 PM	1	16	119	2	138	0	0	0	0	0	0	0	0	0	0	17	53	18	5	93	231
Total	2	49	453	5	509	0	0	0	0	0	0	0	0	0	0	67	200	97	36	400	909
06:00 PM	0	12	93	6	111	0	0	0	0	0	0	0	0	0	0	15	49	16	13	93	204
06:15 PM	0	9	93	3	105	0	0	0	0	0	0	0	0	0	0	17	51	24	7	99	204
Grand Total	2	128	1055	20	1205	0	0	0	0	0	0	0	0	0	0	162	492	219	86	959	2164
Apprch %	0.2	10.6	87.6	1.7		0	0	0	0		0	0	0	0		16.9	51.3	22.8	9		
Total %	0.1	5.9	48.8	0.9	55.7	0	0	0	0	0	0	0	0	0	0	7.5	22.7	10.1	4	44.3	
Car	1	127	1049	20	1197	0	0	0	0	0	0	0	0	0	0	157	471	208	86	922	2119
% Car	50	99.2	99.4	100	99.3	0	0	0	0	0	0	0	0	0	0	96.9	95.7	95	100	96.1	97.9
Light Truck	1	1	3	0	5	0	0	0	0	0	0	0	0	0	0	5	20	8	0	33	38
% Light Truck	50	0.8	0.3	0	0.4	0	0	0	0	0	0	0	0	0	0	3.1	4.1	3.7	0	3.4	1.8
Heavy Truck	0	0	3	0	3	0	0	0	0	0	0	0	0	0	0	0	1	3	0	4	7
% Heavy Truck	0	0	0.3	0	0.2	0	0	0	0	0	0	0	0	0	0	0	0.2	1.4	0	0.4	0.3

TechniQuest Corporation

4105 US Route 1, Suite # 14
Monmouth Junction, NJ 08852
Phone: 732-274-9500 Fax: 732-274-9510

File Name : 06-09PM-SB
Site Code : 9
Start Date : 5/15/2008
Page No : 2

	Summit Avenue Southbound					Westbound					Northbound					Communipaw Avenue Eastbound					
Start Time	Left	Thru	Right	RT to Communipaw Ave	App. Total	Left	Thru	Right	Peds	App. Total	Left	Thru	Right	Peds	App. Total	Left	Thru	Right	Peds	App. Total	Int. Total
Peak Hour Analysis From 04:00 PM to 06:15 PM - Peak 1 of 1																					
Peak Hour for Entire Intersection Begins at 04:30 PM																					
04:30 PM	0	13	104	1	118	0	0	0	0	0	0	0	0	0	0	25	54	22	5	106	224
04:45 PM	0	18	110	2	130	0	0	0	0	0	0	0	0	0	0	21	56	22	13	112	242
05:00 PM	0	10	108	0	118	0	0	0	0	0	0	0	0	0	0	18	39	32	14	103	221
05:15 PM	1	8	119	2	130	0	0	0	0	0	0	0	0	0	0	12	62	27	7	108	238
Total Volume	1	49	441	5	496	0	0	0	0	0	0	0	0	0	0	76	211	103	39	429	925
% App. Total	0.2	9.9	88.9	1		0	0	0	0		0	0	0	0		17.7	49.2	24	9.1		
PHF	.250	.681	.926	.625	.954	.000	.000	.000	.000	.000	.000	.000	.000	.000	.000	.760	.851	.805	.696	.958	.956

TechniQuest Corporation

4105 US Route 1, Suite # 14
Monmouth Junction, NJ 08852
Phone: 732-274-9500 Fax: 732-274-9510

File Name : 06-09PM-SB
Site Code : 9
Start Date : 5/15/2008
Page No : 3

Peak Hour Data

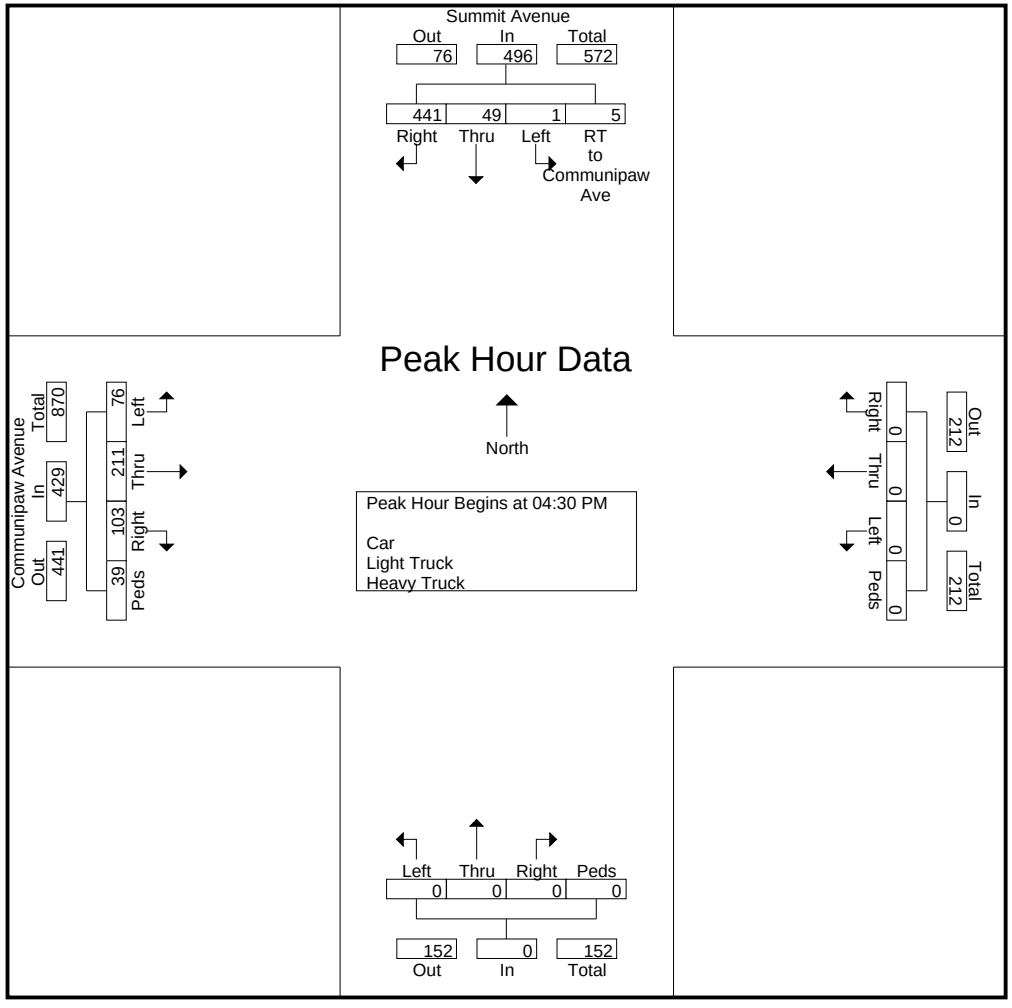

Appendix

Table of Redevelopment Plans Projected to be Constructed by 2050

Anticipated Growth Through 2050

ID	Project Name	Residential Units by 2050	Office or Retail Space SF by 2050	Notes
1	Bayfront (including Kmart site)	8,500 units		dependant on extension of light rail across Route 440
2	Hudson Mall	5,000 units		
3	Route 440 Northeast	3,000 units		
4	Route 440 Southeast	2,000 units		
5	Port Liberte	1,000 units		
6	Residence at Liberty (near golf course)	1,000 units		
7	Burma Road	500 units		
8	Canal Crossing	5,000 units		
9	LSP Park and Ride	1,000 units		
10	Chapel Hill	1,000 units		
11	Danforth Avenue	2,000 units		
12	Whitlock Cordage	330 units		330 units by end of 2008
13	The Beacon	1,000 units		
14	Grand/Jersey	2,500 units		
15	Liberty Harbor North	5,000 units		depends on market, if high demand for office, less residential possible
16	Newport NE	3,000 units		
16	Newport NE		2,000,000 SF	plus 2M SF office
17	Newport NW (Target, Modell today)	3,000 units		
18	Jersey Avenue	4,000 units		assumes new light rail station
19	Metro Plaza (Shoprite today)	4,000 units		
20	Powerhouse Arts District	2,000 units		
21	Hoboken Yards/LCOR/Hudson Crossing	5,000 units		40-50 acres, 60% Hoboken, 40% Jersey City - will include office, retail, 10,000 units, 3M SF office at full build-out
21	Hoboken Yards/LCOR/Hudson Crossing		1,200,000 SF	40-50 acres, 60% Hoboken, 40% Jersey City - will include office, retail, 10,000 units, 3M SF office at full build-out
22	Avalon Cove	2,000 units		
23	Harborside Plaza 8 and 9		1,225,000 SF	
24	Journal Square	10,000 units		
24	Journal Square		1,000,000 SF	plus 1M SF office, not as much office anticipated as waterfront
25	AMB warehouse		880,000 SF	880,000 SF, 24-hour operation, high cube
26	30 Montgomery		1,000,000 SF	1M SF of residential or office
27	Colgate (Goldman Sachs)		1,000,000 SF	1M SF office
28	77 Hudson	1,000 units		
29	vacant lots in Colgate (surface parking today)		1,000,000 SF	1M SF office
30	Gregory Park	1,500 units		
31	Marion Works	3,000 units		
32	New Neighborhood	1,000 units		
33	Berry Lane Park			new park
34	Bates (Foodtown today)	1,500 units		
35	Bayonne Border (HC zone today)	500 units		
36	Meadowlands-Rockefeller Warehouse		539,000 SF	Trip generation from NJMC- Meadowlands report
	Total Additional Residential Units by 2050	**80,330 units**		
	Total Additional Office SF by 2050		**9,844,000 SF**	

Appendix

Mobility Report 2050

2050 Jersey City Mobility Study

Quantitative and Qualitative Research Initiative

Sponsored by
City of Jersey City
North Jersey Transportation Planning Authority
NJ Urban Enterprise Zone Authority

Directed and Written by
Eastland Systems Group, Inc.

Contributing Partners
T&M Associates, Inc.
Resource Systems Group, Inc.

March 3, 2009

TABLE of CONTENTS

Executive Summary 3
A. Purpose 3
B. Design and Methodology 3
C. Summary of Findings 4
D. Actionable Recommendations 7
Methodology 9
Overall Findings 12
Detailed Findings 16
E. Socio-Demographic Profiles 16
F. Peak Travel Period 20
G. Origin and Destination 36
H. Mode Share 40
I. Preferences, Attitudes and Ratings 46
J. Non Work Patterns 55
1. Non Work Trips by Mode - Weekday 71
2. Non Work Trips by Mode – Weekends 76
Qualitative Research Summary 81
Recommendations and Next Steps 89
Appendix A: Outreach and Significance 91

Executive Summary

A. Purpose

The City of Jersey City commissioned a citywide mobility survey initiative entitled "Jersey City 2050 Mobility Survey". The initiative's purpose was to provide community-based information for the Circulation Element of the Jersey City Master Plan. A significant by-product of the mobility survey is current, comprehensive transportation data revealing consumer behavior, preferences and attitudes toward travel to, from and within Jersey City. This new data is more current than the 2000 Journey-to-Work Census and more detailed than the American Community Survey and will be used by major transportation agencies in the region including North Jersey Transportation Planning Authority, New Jersey Transit, and Port Authority of New York and New Jersey.

B. Design and Methodology

The Jersey City 2050 Mobility Survey focused on three travel markets.

- Market Segment 1: People working in Jersey City and living elsewhere
- Market Segment 2: People living in Jersey City and working elsewhere or not working
- Market Segment 3: People both living and working in Jersey City

The survey was designed to capture travel needs, preferences and attitudes among people in each market segment traveling to, from and within Jersey City.

The study began in April 2008 and ended in May 2008. A representative sample of 600 completed questionnaires was expected for each market segment. An intensive outreach and field program yielded over 2,500 useable responses substantially exceeding the sample goal as follows.

- Sample for Market Segment 1: 1,437
- Sample for Market Segment 2: 668
- Sample for Market Segment 3: 694

An ambitious data collection goal was to obtain data that also represented Neighborhood Level Analysis Zones (NLAZ) for each market segment given a very limited budget. There were seven zones as defined by New Jersey Transit.

The survey instrument was developed in close collaboration with Jersey City, the study's Technical Advisory Committee which included members from New Jersey Transit, Port Authority of New York and New Jersey, North Jersey Transportation Planning Authority, Hudson County Planning, various departments within Jersey City Planning and Development, and the lead consultant firm, T&M Associates.

The Jersey City Mobility Survey was conducted online and also administered in the field at various locations including the Mayor's Office, public libraries in each NLAZ area,

local community organizations and through intercepts at various locations throughout Jersey City. This extensive outreach program was designed to give Jersey City residents and workers the broadest access possible to the mobility survey given limited funding constraints.

Finally, Resource Systems Group (RSG) was hired to provide peer review and guidance on sampling strategies, confidence levels and margin of error for the Jersey City Mobility Study. RSG was also responsible for weighting the Jersey City Mobility data set to match the census data.

C. Summary of Findings

Principle findings from the Jersey City 2050 Mobility Study provide mobility patterns to, from and within Jersey City, attitudes towards existing transit services, and preferences on transit service attributes and transportation goals. The findings also point to Transportation Demand Management (TDM) preferences and challenges to address through effective transportation improvement strategies.

Most notable is the consistency found in responses across market segments and neighborhoods, even in the presence of very small sample for some neighborhoods. Consistency abounds in the themes that emerged from this study. The major themes, listed below, were validated as important concerns because they also emerged through independent communication with stakeholder groups, TAC members and participation by the general public in public meetings.

Emergent Themes

- Mass Transportation
  a. Service from each neighborhood into major destinations within Jersey City such as Journal Square, Downtown, Newport and Route 440.
  b. Service to major regional transit hubs such as Amtrak, Secaucus Transfer.
  c. Expanded service levels throughout the day and on weekends, at higher frequencies and less crowding.
  d. Service expansion of Hudson-Bergen Light Rail and PATH.
- Roadway
  a. Strong repair and maintenance program.
  b. Solutions to traffic congestion, particularly at major locations such as Route 1&9, approaches from 139 and the NJ Turnpike to the Holland Tunnel, and the merge at Montgomery Street from the Turnpike.
  c. Solutions for traffic accidents/unsafe conditions on many roads including JFK, Erie Street, 2nd Street and Christopher Columbus, Communipaw Avenue, Route 440 and Route 1&9.
  d. Solutions for construction inducted traffic delays.
  e. Use of traffic signals to control traffic and reduce delays.
- Parking
  a. Parking requirements for all new buildings.
  b. Parking bans/restrictions during certain times and on certain thoroughfares.
- Pedestrian/Bicycle

a. Bike racks/facilities near transit stations and major facilities like Liberty State Park.
b. City-employer partnerships for citywide biking initiatives including showers, racks, lanes and storage facilities.
c. Bike-friendly streets and safe walkways.
d. Bike allowances on board rail facilities such as PATH and light rail.
e. Pedestrian and bike-friendly Jersey City.

- Mobility for Disabled
  a. Expanded and improved access for disabled and physically challenged including seniors and mothers with babies.
  b. Adequate capacity for disabled equipment including space for wheelchairs to fit properly, working elevators at transit facilities.
  c. Reduced walk time to access transit services.
- Safety
  a. Enforced traffic laws.
  b. Improved security in and around transit facilities/services.
  c. Trained transit operators.
  d. Longer delays for doors on train cars.
  e. Improved road construction notices.
  f. Improved street intersection control for all vehicle/transit traffic.
  g. Improved light control for ease and safety of pedestrian traffic.
  h. Installation of cameras.
- General/Other/Global
  a. Develop a comprehensive mobility strategy for Jersey City.
  b. Address all areas in the city including low income areas.
  c. Develop an integrated communication system for transportation.
  d. Develop an integrated fare system for transportation involving all transportation agencies.
  e. Encourage alternative means of travel citywide like pedestrian and bicycle modes of travel.

The vast amount of data obtained through the Jersey City 2050 Mobility Survey and the themes that emerged helped shape the identification and definition of 14 mobility goals for the Circulation Element Plan and ensuring goal objectives and strategies. Provided below is a summary of key findings.

Mobility Patterns

- Origin and destination patterns are reasonably close to expectations even where small sample was obtained for some neighborhoods.

- Overall transit share and by market segment is much higher than the 2000 Journey-to-Work Census. This increase in transit share is easily explainable by structural changes in Jersey City such as the Hudson-Bergen Light Rail system and rapid and continuous residential and commercial development, particularly in Downtown Jersey City.

- Areas East-of-the Hudson River and the counties of Essex, Morris, Bergen, Hudson, Monmouth, Middlesex, Ocean and Union continue to be major labor markets for Jersey City employers[1].

- Transit options abound within certain origin-destination paths such as commuters from areas east-of-the Hudson into Downtown Jersey City. Alternatively, transit options are limited within other origin-destination paths such as Jersey City Heights to work outside or within Jersey City.

- Almost half of the people surveyed across all markets do not use transit as their primary means for travel.

- AM peak hour arrival time for people
    - Working in Jersey City: 8:00 AM to 9:00 AM
    - Working and Living in Jersey City: 8:00 AM to 9:00 AM
- AM peak hour departure time for people
    - Living in Jersey City: 7:30 AM to 8:30 AM

- PM peak hour departure time for people
    - Working in Jersey City: 6:00 PM to 7:00 PM
    - Working and Living in Jersey City: 5:00 PM to 6:00 PM
- PM peak hour arrival time for people
    - Living in Jersey City: 6:00 PM to 7:00 PM

Attitudes Towards Transit Service

- "*Stops close to home*," "*Service is cheaper*" and "*Service is safe*" are important priorities for non primary transit users to consider transit as a primary mode of travel.

- Non primary transit users have an overall low impression of existing transit service for "*travel to Jersey City*" – only 23% of these respondents gave existing transit a high rating (8 to 10; where 10 is "*excellent*" and 1 is "*extremely poor*").

- Non primary and primary transit users have an overall low impression of existing transit service for "*travel within Jersey City*" – only 21% of both groups gave an 8 to 10 rating.

- Non primary transit users and primary transit users also have an overall low impression of existing transit service for "*travel from Jersey City*" – respectively only 21% and 26% of these respondents gave an 8 to 10 rating.

[1] Research conducted in the late 1980s and early 1990s for the Hudson-Bergen Light Rail (HBLRT) system first illustrated this pattern.

- Planning Goal 2: *"Increase, improve, and enhance public transit service to, from, and within all areas of Jersey City"* is the number one priority among all market segments.

- Planning Goal 8: *"Improve access between Jersey City and the greater region*" is the number two priority among people who "Work in Jersey City"

- Planning Goal 3: "*Integrate and connect neighborhoods, and improve public access to waterfront areas*" is the number two goal for people who "*Work outside Jersey City*" or who "*Work and Live in Jersey City*".

- Transit shares can be increased further through effective TDM strategies and integrated, reliable transit services.

- Specific "*Transportation Priority Goals*" ranked high by respondents include:
    a. *Fix and maintain existing transportation systems*
    b. *Increase transit options*
    c. *Fix and maintain existing roads and bridges*
    d. *Reduce motor vehicle accidents*
    e. *Improve pedestrian safety and security*

D. Actionable Recommendations

Results obtained from the Jersey City 2050 Mobility Study are useable for the transportation planning purposes of this study. Specific recommendations for planning uses include the following.

- Update transit versus non transit shares by market segment – data is more recent than the Census or other data available through transportation agencies in the region.
- Rely on origin and destination patterns in the Circulation Element Plan – patterns are reasonably consistent with known data and are remarkably similar to patterns revealed more than a decade old during peer-reviewed planning efforts for the $1.3 billion dollar Hudson-Bergen Light Rail project.
- Develop highway volumes using on O-D patterns from the survey and the North Jersey Transportation Planning Authority (NJTPA) trip tables – the NJTPA is the recognized transportation planning agency in New Jersey and has a model appropriate for this use.
- Plan and develop specific transportation goals and improvement strategies targeted to each market segment – the vast quantitative and qualitative data obtained in this study identifies relevant, comprehensive, community-based needs that can be addressed through cooperative planning in the region and within Jersey City.
- Collaborate with regional transportation providers such as New Jersey Transit and Port Authority of New York & New Jersey to identify and recommend transit-

based capital improvement projects that specifically address needs and challenges identified by respondents – quantitatively and qualitatively.

- Identify, develop and implement more directly the "unaddressed" needs such as those of senior citizens, disabled and geographic-based challenges based on respondent feedback obtained in this study.
- Identify and provide funding to support development of survey data detailed enough for transportation modeling and specific engineering needs – the survey provides a great start, but study limitations may require more effort for these purposes, particularly in areas outside of Downtown Jersey City.

Limitations of this study are small samples obtained in some cases at the neighborhood level. Resource Systems Group, the peer review firm, also notes the sparseness of the data at the neighborhood level. Thus, care, through experienced-based knowledge, consistency with other quality information, and assessments of reasonableness is needed when using small samples at the neighborhood level before making sweeping generalizations for planning, modeling or engineering purposes. This knowledge, other information and assessments of reasonableness should be identified and transparent in application.

Finally, it is recommended that Jersey City work closely with New Jersey Transit to support and collaborate on the design of another study needed for the anticipated expansion of the Hudson-Bergen Light Rail in Jersey City. This next study should extend the work started for this 2050 Mobility Survey and address, where needed, any gaps identified (i.e. small sample sizes).

Methodology

The City of Jersey City commissioned a citywide mobility survey initiative – Jersey City 2050 Mobility Survey to support updating the Circulation Element of its Jersey City Master Plan. The survey was designed to support the planning document that describes an action-oriented plan for a citywide, multi-modal transportation network that serves today's needs and future needs including movement of people and goods and the link between land use and transportation. The Jersey City Mobility 2050 Mobility Survey focused on three market segments regarding mobility challenges to, from and within Jersey City:

1. ***Market Segment 1***: People work in Jersey City and live elsewhere
2. ***Market Segment 2***: People who live in Jersey City and work elsewhere or do not work
3. ***Market Segment 3***: People who both work and live in Jersey City

Field work for the mobility survey began in April 2008 and ended in May 2008. This survey is the most recent picture of mobility patterns, attitudes and preferences for the northern New Jersey transportation region. In fact, this survey provides more recent information than the 2000 Journey-to-Work Census or American Community Survey due to:

- 2000 Journey-to-Work does not account for major structural changes in transportation services that have occurred (e.g. Implementation of the Hudson-Bergen Light Rail system);
- 2000 Journey-to-Work does not account for the substantial and continued growth in economic development that has occurred since the year 2000; and
- American Community Survey provides only city level data and could not be used for neighborhood level analysis or weighting.

Data from the Jersey City 2050 Mobility Survey will be used by North Jersey Transportation Planning Authority, New Jersey Transit, Port Authority of New York & New Jersey, and the city of Jersey City for planning and projecting mobility needs in the region, and specifically within, to and from Jersey City.

A total of 600 completed questionnaires were expected for each market segment. A statistically representative sample for each market segment within a minimum margin of error of +/– 10% at a 95% level of confidence was the proposed goal, assuming a random sample selection of responses[2].

The use of 2000 Census data, primarily Journey-to-Work data, was initially recommended to:

- Weight completed responses to the total population of workers and residents in Jersey City;

[2] Details are provided in Appendix A.

- Develop a sampling distribution plan and check that population groups were adequately represented; and
- Examine the reasonableness of distributions received from the 2050 Mobility Survey.

Gender, income, geography, transit/non-transit users and the ability to identify respondents by neighborhood and UEZ or non-UEZ responses were considered in the sampling plan. Census data was aggregated based on census tracts into seven, distinct Neighborhood Level Analysis Zones (NLAZ). Mapping for these aggregations were provided by Jersey City from NJ Transit. Aggregations were used to develop sampling plans and report data. Neighborhood level aggregations also avoided inherent pitfalls because data in some census tracts are not reportable (i.e. confidentiality restrictions).

Eastland Systems Group reviewed the survey instruments provided by Jersey City Planning and developed a questionnaire, in close collaboration with Jersey City, the Technical Advisory Committee and the lead consultant firm, T&M Associates. Effectively, the survey instrument used to conduct the mobility survey was a collaborative effort between Jersey City, the Technical Advisory Committee which included members from New Jersey Transit (NJT), New York and New Jersey Port Authority (PANYNJ), New Jersey Transportation Planning Agency (NJTPA), Hudson County Planning and various departments within Jersey City Planning and Development.

The mobility questionnaire included questions to extract origin and destination work patterns, some non work behavior, attitudes and preferences towards existing transportation services, and ways to address mobility challenges that meet resident and worker needs. The survey included extensive quantitative and qualitative components. A final approved combined survey instrument was the product of this collaboration.

The combined mobility survey was delivered in both English and Spanish. Eastland Systems Group employed internet-based surveying techniques to administer the Jersey City Mobility 2050 Combined Survey. Jersey City provided support in conducting a comprehensive outreach program with Jersey City residents and employers and to notify employees of the availability of the mobility survey.

Various outreach channels were used including the Mayor's press release and the Jersey City Mobility 2050 website to encourage survey participation and to support other data collection channels where the online process was not feasible. The comprehensive, intensive outreach plan[3] was developed and initiated by Jersey City, and where needed, supported by Eastland Systems Group. This intensive outreach began with the press release from the Mayor of Jersey City to announce the start date, need for and importance of the 2050 Mobility Survey.

Online surveys were monitored and reported daily to ensure adequate survey returns. Through the survey outreach implementation plan and screener questionnaire, Eastland was able to obtain adequate surveys from a wide cross-section of Jersey City residents and workers. Targeted outreach was used to reach under-responding target populations and included field and intercept surveys where needed. Where necessary, Eastland Systems Group also administered paper surveys in the field to augment sample cells.

[3] See Appendix A for a full description of the outreach program.

Eastland Systems Group provided weekly summaries of survey results during the field period and worked closely with its peer review team, Resource Systems Group, throughout the sampling design and implementation process.

Finally, the peer review firm, Resource Systems Group, Inc. (RSG) was contracted to provide peer review and guidance on sampling strategies, confidence levels, and margin of error for the Jersey City Mobility Study[4]. RSG was also responsible for weighting the Jersey City Mobility dataset to match census data.

[4] See Appendix B for the detailed peer review report.

Overall Findings

Principle findings from the Jersey City 2050 Mobility Study provide mobility patterns to, from and within Jersey City, attitudes towards existing transit services, and preferences on transit service attributes and transportation goals. The findings also point to Transportation Demand Management (TDM) preferences and challenges to address through effective transportation improvement strategies.

Most notable is the consistency found in responses across market segments and neighborhoods, even in the presence of very small sample for some neighborhoods. Consistency abounds in the themes that emerged from this study. The major themes, listed below, were validated as important concerns because they also emerged through independent communication with stakeholder groups, TAC members and participation by the general public in public meetings.

Emergent Themes

- Mass Transportation
  a. Service from each neighborhood into major destinations within Jersey City such as Journal Square, Downtown, Newport and Route 440.
  b. Service to major regional transit hubs such as Amtrak, Secaucus Transfer.
  c. Expanded service levels throughout the day and on weekends, at higher frequencies and less crowding.
  d. Service expansion of Hudson-Bergen Light Rail and PATH.
- Roadway
  a. Strong repair and maintenance program.
  b. Solutions to traffic congestion, particularly at major locations such as Route 1&9, approaches from 139 and the NJ Turnpike to the Holland Tunnel, and the merge at Montgomery Street from the Turnpike.
  c. Solutions for traffic accidents/unsafe conditions on many roads including JFK, Erie Street, 2nd Street and Christopher Columbus, Communipaw Avenue, Route 440 and Route 1&9.
  d. Solutions for construction inducted traffic delays.
  e. Use of traffic signals to control traffic and reduce delays.
- Parking
  a. Parking requirements for all new buildings.
  b. Parking bans/restrictions during certain times and on certain thoroughfares.
- Pedestrian/Bicycle
  a. Bike racks/facilities near transit stations and major facilities like Liberty State Park.
  b. City-employer partnerships for citywide biking initiatives including showers, racks, lanes and storage facilities.
  c. Bike-friendly streets and safe walkways.
  d. Bike allowances on board rail facilities such as PATH and light rail.
  e. Pedestrian and bike-friendly Jersey City.
- Mobility for Disabled
  a. Expanded and improved access for disabled and physically challenged including seniors and mothers with babies.

b. Adequate capacity for disabled equipment including space for wheelchairs to fit properly, working elevators at transit facilities.
c. Reduced walk time to access transit services.

- Safety
  a. Enforced traffic laws.
  b. Improved security in and around transit facilities/services.
  c. Trained transit operators.
  d. Longer delays for doors on train cars.
  e. Improved road construction notices.
  f. Improved street intersection control for all vehicle/transit traffic.
  g. Improved light control for ease and safety of pedestrian traffic.
  h. Installation of cameras.
- General/Other/Global
  a. Develop a comprehensive mobility strategy for Jersey City.
  b. Address all areas in the city including low income areas.
  c. Develop an integrated communication system for transportation.
  d. Develop an integrated fare system for transportation involving all transportation agencies.
  e. Encourage alternative means of travel citywide like pedestrian and bicycle modes of travel.

The vast amount of data obtained through the Jersey City 2050 Mobility Survey and the themes that emerged helped shape the identification and definition of 14 mobility goals for the Circulation Element Plan and ensuring goal objectives and strategies. Provided below is a summary of key findings.

Mobility Patterns

- Origin and destination patterns are reasonably close to expectations even where small sample was obtained for some neighborhoods.

- Overall transit share and by market segment is much higher than the 2000 Journey-to-Work Census. This increase in transit share is easily explainable by structural changes in Jersey City such as the Hudson-Bergen Light Rail system and rapid and continuous residential and commercial development, particularly in Downtown Jersey City.

- Areas East-of-the Hudson River and the counties of Essex, Morris, Bergen, Hudson, Monmouth, Middlesex, Ocean and Union continue to be major labor markets for Jersey City employers[5].

- Transit options abound within certain origin-destination paths such as commuters from areas east-of-the Hudson into Downtown Jersey City. Alternatively, transit options are limited within other origin-destination paths such as Jersey City Heights to work outside or within Jersey City.

[5] Research conducted in the late 1980s and early 1990s for the Hudson-Bergen Light Rail (HBLRT) system first illustrated this pattern.

- Almost half of the people surveyed across all markets do not use transit as their primary means for travel.

- AM peak hour arrival time for people
    - Working in Jersey City: 8:00 AM to 9:00 AM
    - Working and Living in Jersey City: 8:00 AM to 9:00 AM
- AM peak hour departure time for people
    - Living in Jersey City but working elsewhere: 7:30 AM to 8:30 AM

- PM peak hour departure time for people
    - Working in Jersey City: 6:00 PM to 7:00 PM
    - Working and Living in Jersey City: 5:00 PM to 6:00 PM
- PM peak hour arrival time for people
    - Living in Jersey City but working elsewhere: 6:00 PM to 7:00 PM

Attitudes Towards Transit Service

- "*Stops close to home*," "*Service is cheaper*" and "*Service is safe*" are important priorities for non primary transit users to consider transit as a primary mode of travel.

- Non primary transit users have an overall low impression of existing transit service for "*travel to Jersey City*" – only 23% of these respondents gave existing transit a high rating (8 to 10; where 10 is "*excellent*" and 1 is "*extremely poor*").

- Non primary and primary transit users have an overall low impression of existing transit service for "*travel within Jersey City*" – only 21% of both groups gave an 8 to 10 rating.

- Non primary transit users and primary transit users also have an overall low impression of existing transit service for "*travel from Jersey City*" – respectively only 21% and 26% of these respondents gave an 8 to 10 rating.

Challenges and Improvement Strategies

- Planning Goal 2: *"Increase, improve, and enhance public transit service to, from, and within all areas of Jersey City"* is the number one priority among all market segments.

- Planning Goal 8: *"Improve access between Jersey City and the greater region*" is the number two priority among people who "Work in Jersey City"

- Planning Goal 3: "*Integrate and connect neighborhoods, and improve public access to waterfront areas*" is the number two goal for people who "*Work outside Jersey City*" or who "*Work and Live in Jersey City*".

- Transit shares can be increased further through effective TDM strategies and integrated, reliable transit services.

- Specific "*Transportation Priority Goals*" ranked high by respondents include:
    a. *Fix and maintain existing transportation systems*
    b. *Increase transit options*
    c. *Fix and maintain existing roads and bridges*
    d. *Reduce motor vehicle accidents*
    e. *Improve pedestrian safety and security*

Detailed Findings

E. Socio-Demographic Profiles

The 2008 Jersey City 2050 Mobility Survey resulted in 2,799 respondents across three market segments.

- Market Segment 1: People working in Jersey City but living elsewhere
- Market Segment 2: People living in Jersey City but working elsewhere or not working (21.7% of all Market Segment 2)
- Market Segment 3: People both working and living in Jersey City

Over fifty percent of people surveyed consist of people who "Work in Jersey City" but are living elsewhere (see Figure 1).

Figure 1

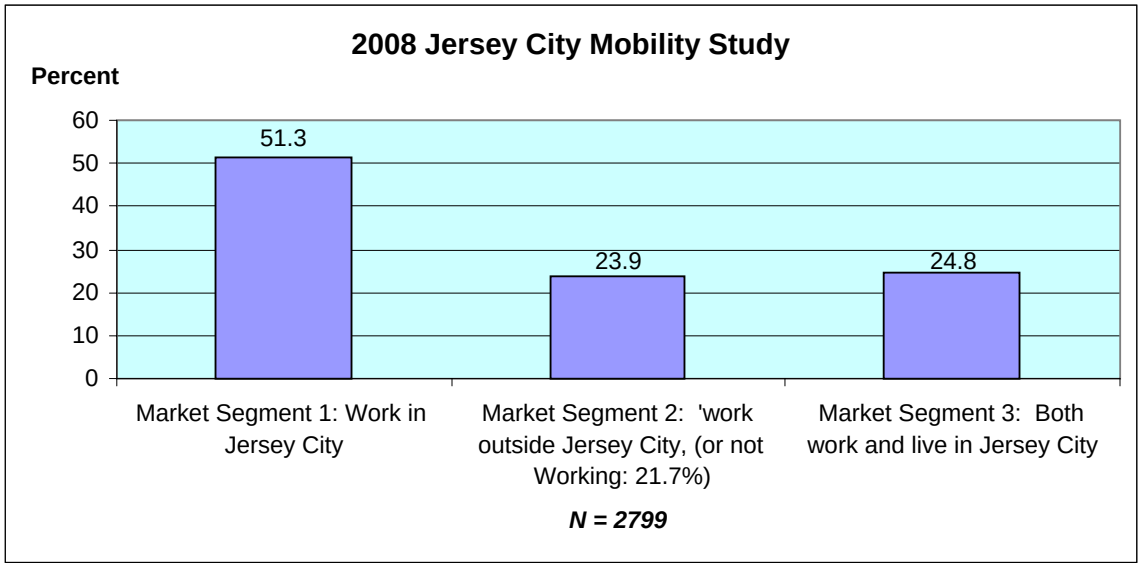

	Frequency	Percent
Work in Jersey City	1437	51.3
Work outside Jersey City, or not working	668	23.9
Both work and live in Jersey City	694	24.8
Total	2799	100.0

Respondents are also distributed across four income groups (Figure 2). People who identified themselves as respondents who only "Work in Jersey City" tended to have higher incomes. Approximately 60% of these respondents reported annual household incomes of at least $100,000. Conversely, less than 2% of these respondents have incomes under $25,000. While people who are Jersey City residents but "Work outside Jersey City", or both "Work and Live in Jersey City", also reported having high incomes, these respondents consisted of many more low income groups as well (i.e. under $25K:15%;13% respectively).

Figure 2

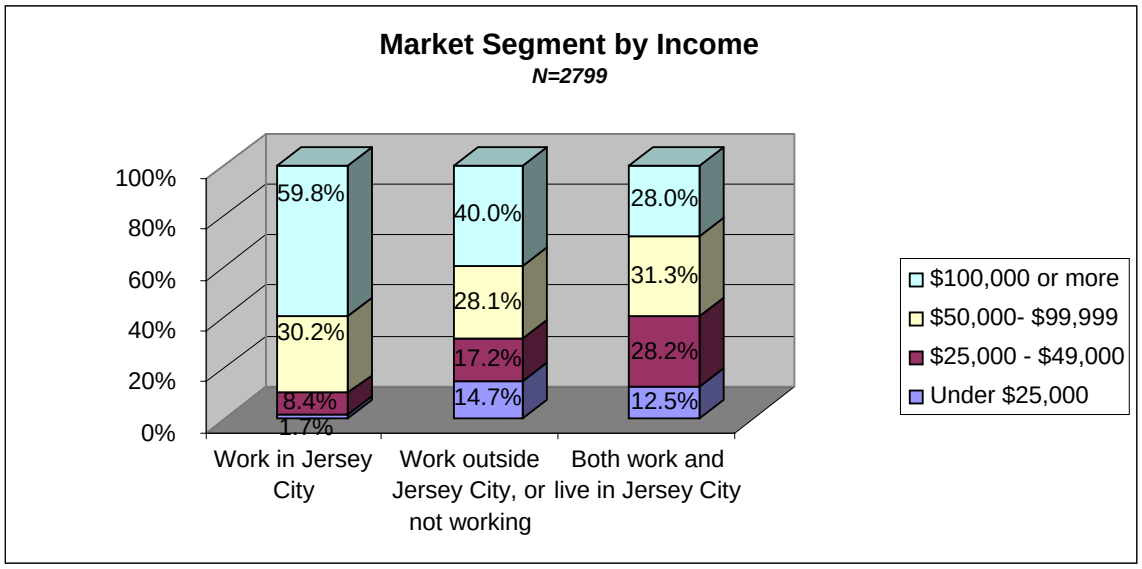

	Work in JC	Work outside JC, or not working	Work/Live in JC
Under $25,000	1.7%	14.7%	12.5%
$25,000 - $49,000	8.4%	17.2%	28.2%
$50,000- $99,999	30.2%	28.1%	31.3%
$100,000 or more	59.8%	40.0%	28.0%

All market segments have fewer respondents among people 55 years of age and older (Figure 3). However, people who were in the 55+ category identified very specific mobility needs that apply in many neighborhoods for their age group. For instance:

"Our biggest concern is public transportation. We have no transportation available to us to Journal Square. We must take two buses. No one is addressing our issues. We are Senior Citizens and deserve better treatment."

"I am disabled, on crutches, and lack of elevator at Grove St PATH is major problem! It is easier for me to use the jitney vans or local buses than PATH to get to NYC or get around due to lack of elevators for disabled or handicapped."

"Reduced or waived fare programs for light rail service for the disabled or limited income residents. A senior citizen or disabled person shuttle service to various shopping centers and other communal facilities."

"Need transportation from Jersey City Heights to downtown JC and Newport. (I) Live off (the) Boulevard. and (my) only means of transportation is on Palisade Ave-too far and unsafe. Start bus service from Summit Ave"

"Consideration should also be given to the issue of pedestrian behavior. Nobody seems to use the pedestrian crossings; and folks just cross at all sections of the street, even jaywalking diagonally at intersections, and leaving to motorists not to be surprised".

"When developing an area such as Route 440 make the public aware of all traffic studies that are done. With all the development that is to come on RT 440 we need improved traffic patterns."

"I would like to be able to get to work without always driving. Maybe some shuttle from Journal Square to Sip Ave and U.S. Hwy #1"

Thus, respondent verbatim information provides substantial data to evaluate mobility needs of this mature population and develop strategies that meet their needs.

Figure 3

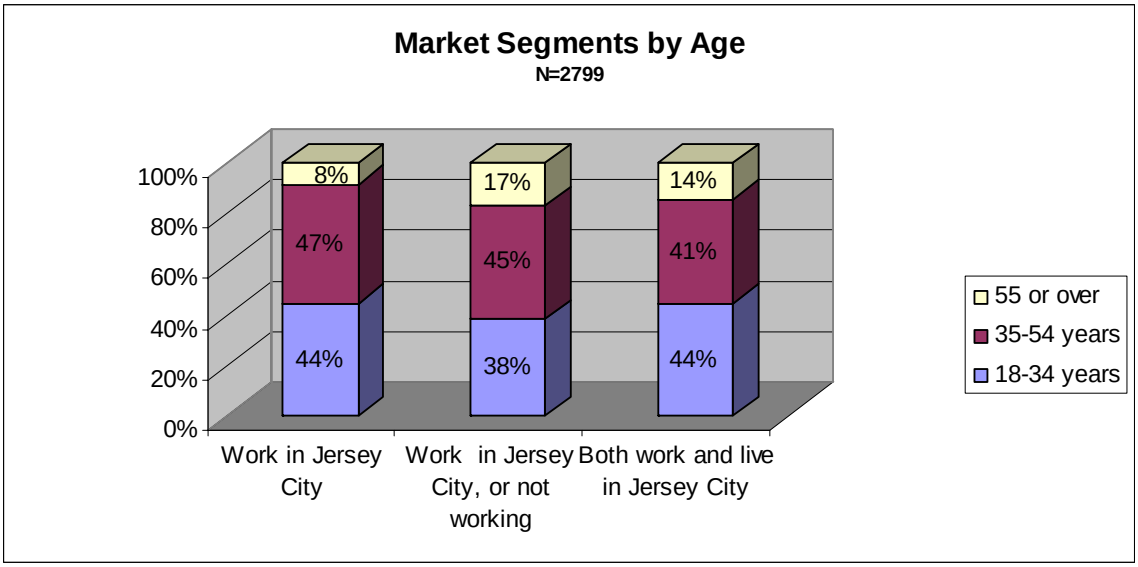

Among the respondents who "Work in Jersey City", close to 60% are males (Figure 4). Alternatively, more females than males responded to the survey in market segments 2 (Work outside Jersey City) and 3 (Work and Live in Jersey City) - 55% and 58% respectively.

Figure 4

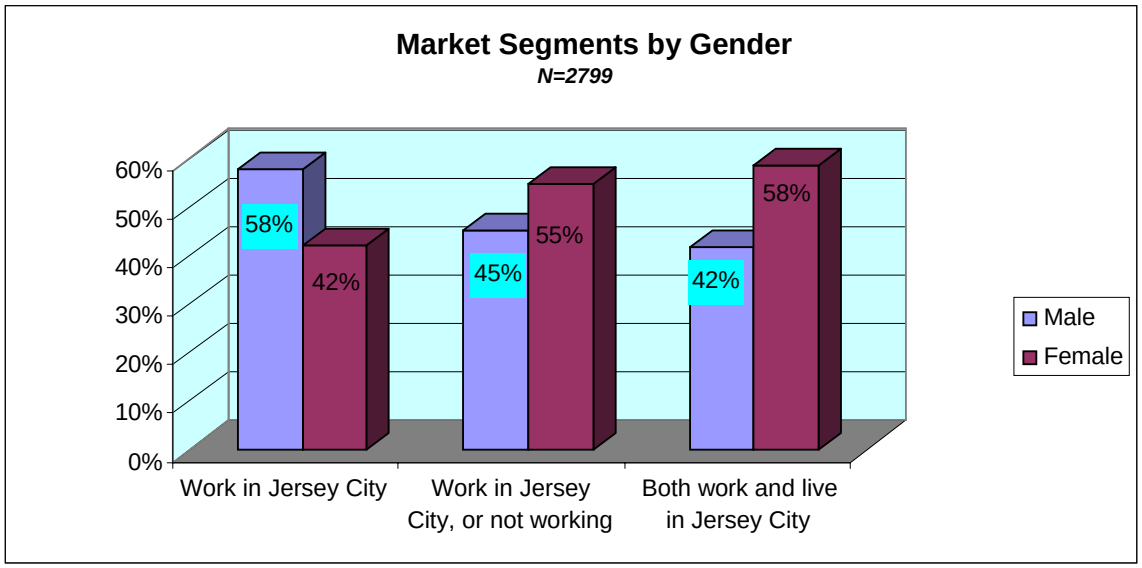

F. Peak Travel Period

Analysis of when respondents leave for work and arrive is examined by market segment and time period (Figures 5 through 14). Most respondents (80%), who "Work in Jersey City, leave for work between the hours of 6:00 AM and 8:30 AM. The peak hour for these departures is 7:00AM to 8:00AM and the peak of this peak is 7:00AM to 7:30AM.

Figure 5[6]

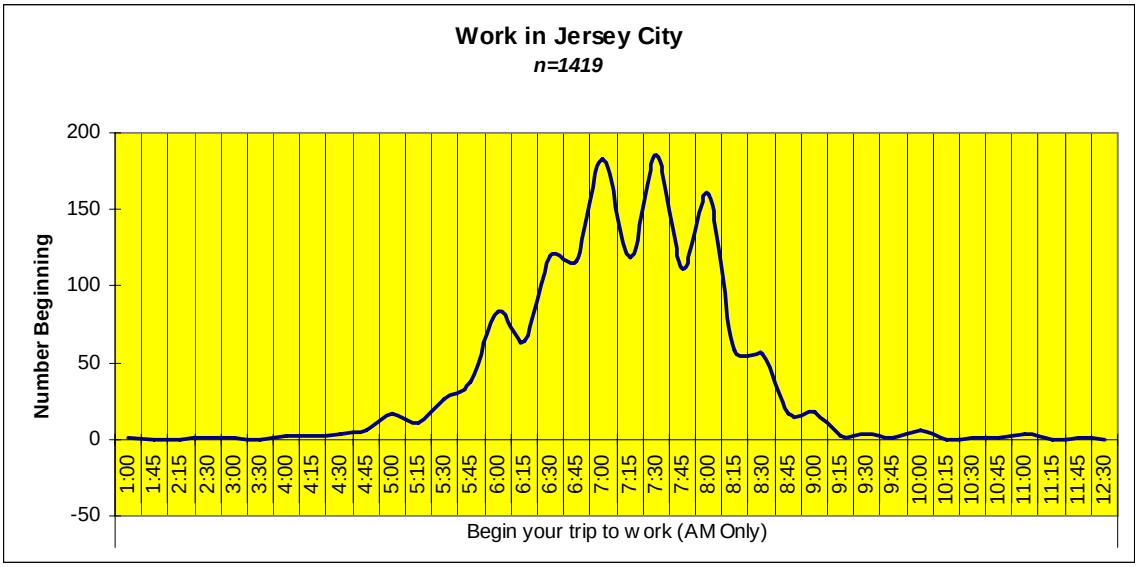

The vast majority of these respondents (85%) arrive at work between 7:00AM and 9:15AM with a peak hour from 8:00AM and 9:00AM. The peak of the peak is 8:30AM to 9:00AM.

Figure 6[7]

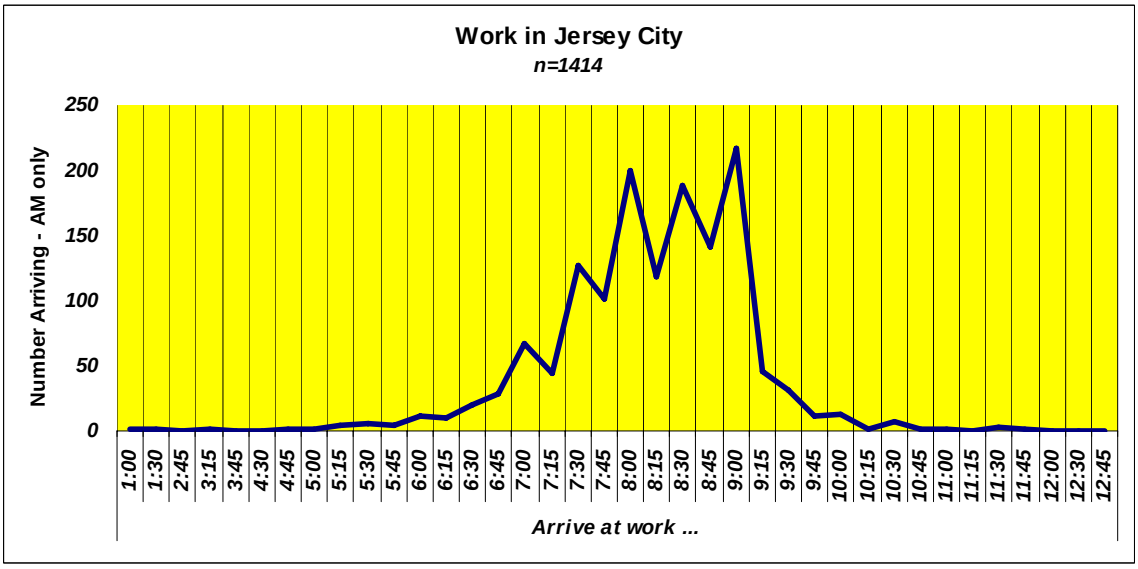

[6] See Technical Appendix for data table.
[7] See Technical Appendix for data table.

The amount of time most respondents (88%) who "Work in Jersey City" spend going to work in the AM generally falls within 30 minutes to one and a half hours. Half of these workers (52%) travel 45 minutes to one hour in getting to employment locations within Jersey City.

Figure 7

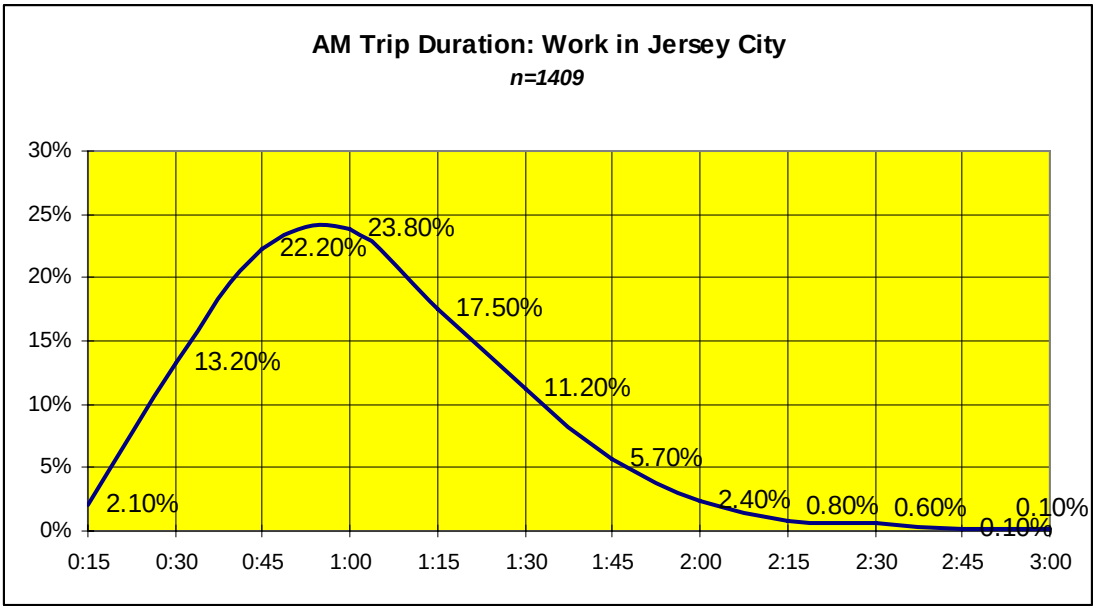

Data Table – AM Trip Duration[8]

Time	Count
0:15	30
0:30	**187**
0:45	**314**
1:00	**336**
1:15	**247**
1:30	**159**
1:45	**80**
2:00	34
2:15	11
2:30	8
2:45	1
3:00	2

[8] Outliers or respondent errors are not included in the distribution figure or data table.

Respondents (92%) who live in Jersey City but go to employment beyond Jersey City borders start off for work in the AM between 6:00 and 9:15. Peak hour departure time is from 7:30AM to 8:30AM for 57%.

Figure 8[9]

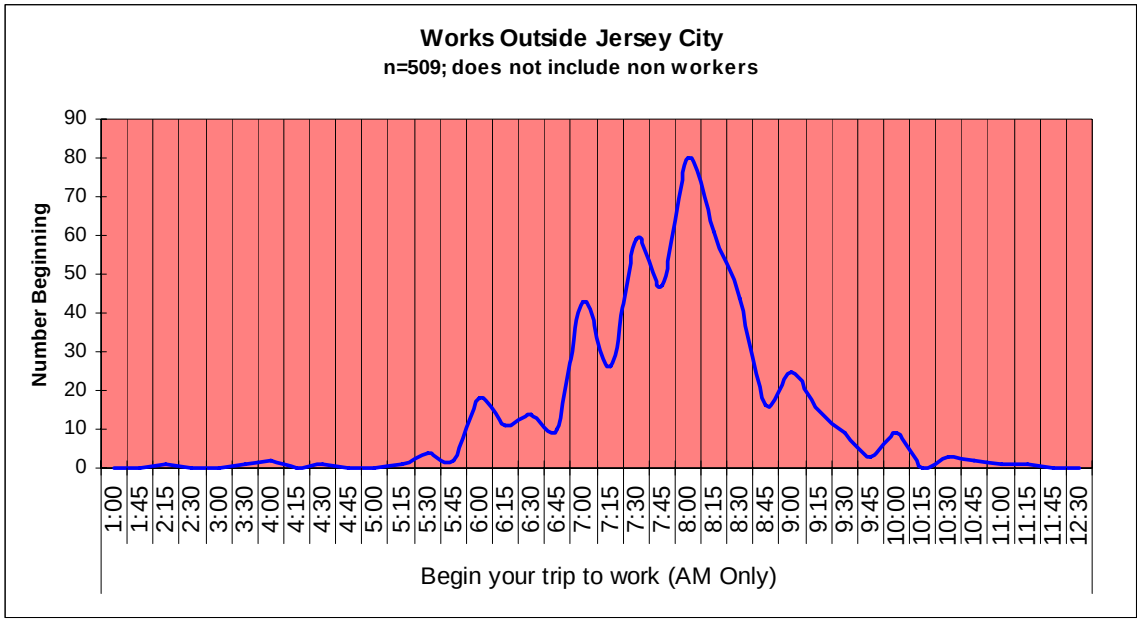

Most respondents (87%) working outside Jersey City begin arriving at work between 7:30AM and 10:00AM. The AM peak hour arrival time for respondents working outside Jersey City is 8:30 to 9:30.

Figure 9[10]

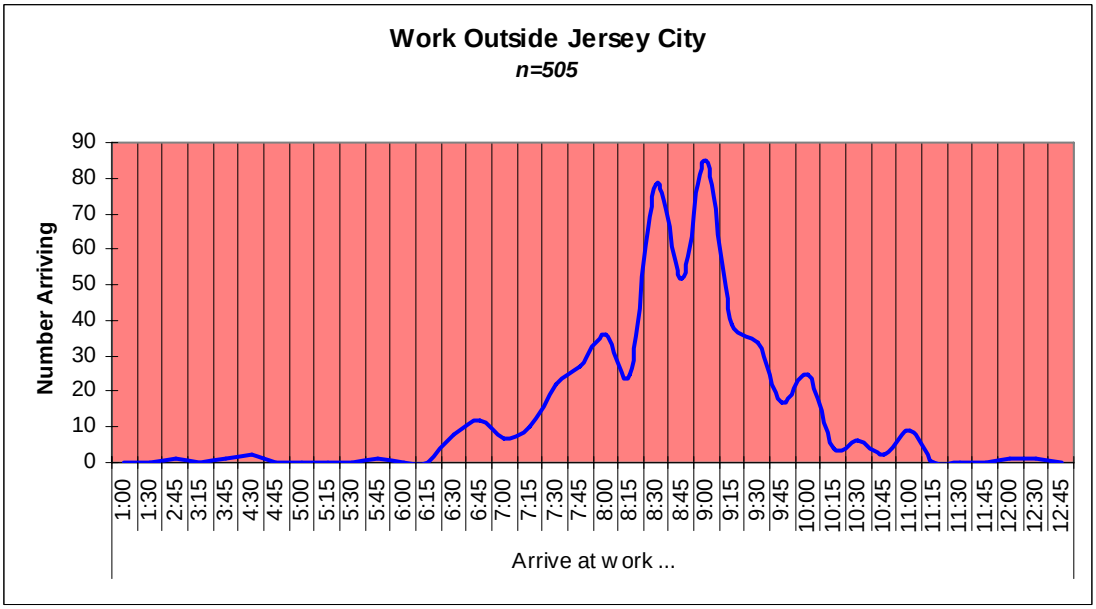

[9] See Technical Appendix for data table.
[10] See Technical Appendix for data table.

The duration of AM travel for most respondents (85%) going to work outside of Jersey City ranges between 30 minutes to one hour. Sixty-four percent of the respondents experience travel time between 45 minutes and one hour in getting to work.

Figure 10

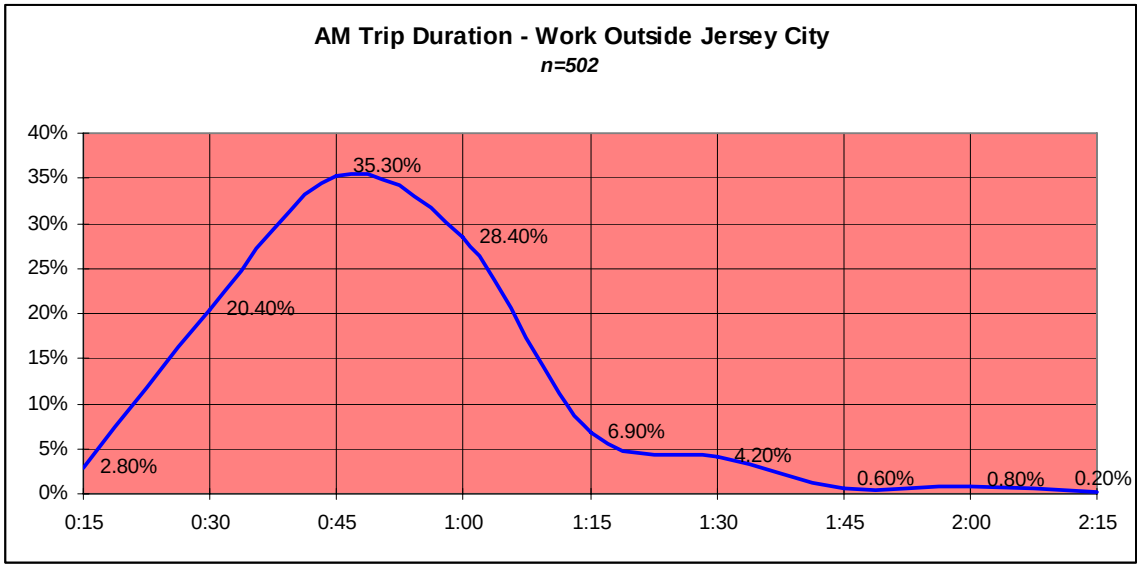

Data Table – AM Trip Duration[11]

Time	Count
0:15	14
0:30	**103**
0:45	**178**
1:00	**143**
1:15	35
1:30	21
1:45	3
2:00	4
2:15	1

11

Respondents (95%), who both "Live and Work in Jersey City," generally leave for work between 6:00AM and 10:00AM. The AM peak hour departure time is between 7:30AM to 8:30AM where 55% of the respondents reported leaving in this period.

Figure 11[12]

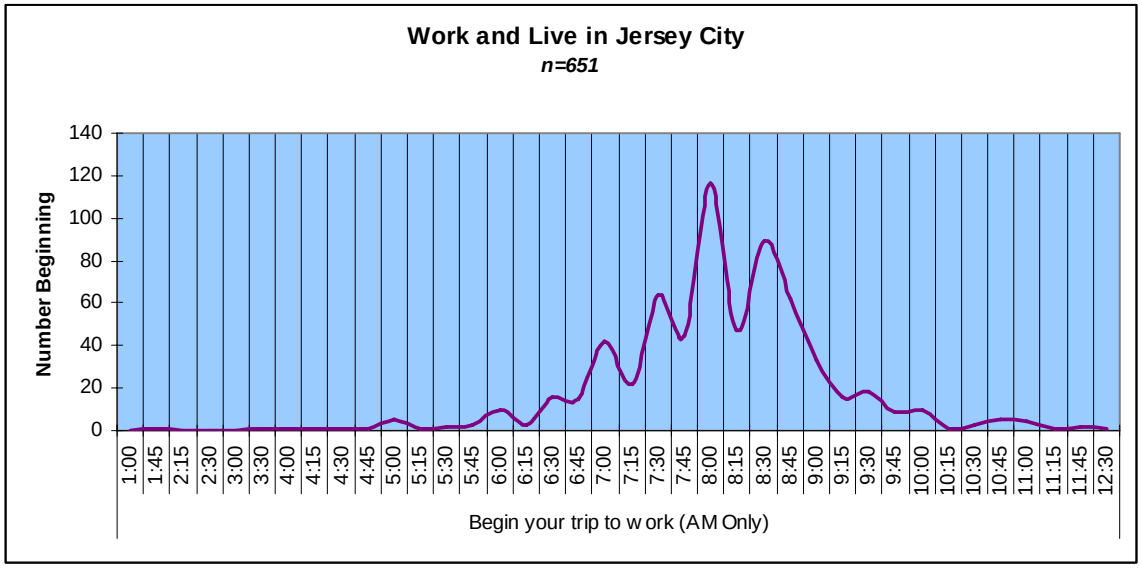

Arrival times to work for most respondents (93%) who live and work within Jersey City occur between 7:00 AM and 10:15 AM. Peak hour arrivals occur from 8:00AM and 9:00AM for 62% of the respondents in this market segment.

Figure 12[13]

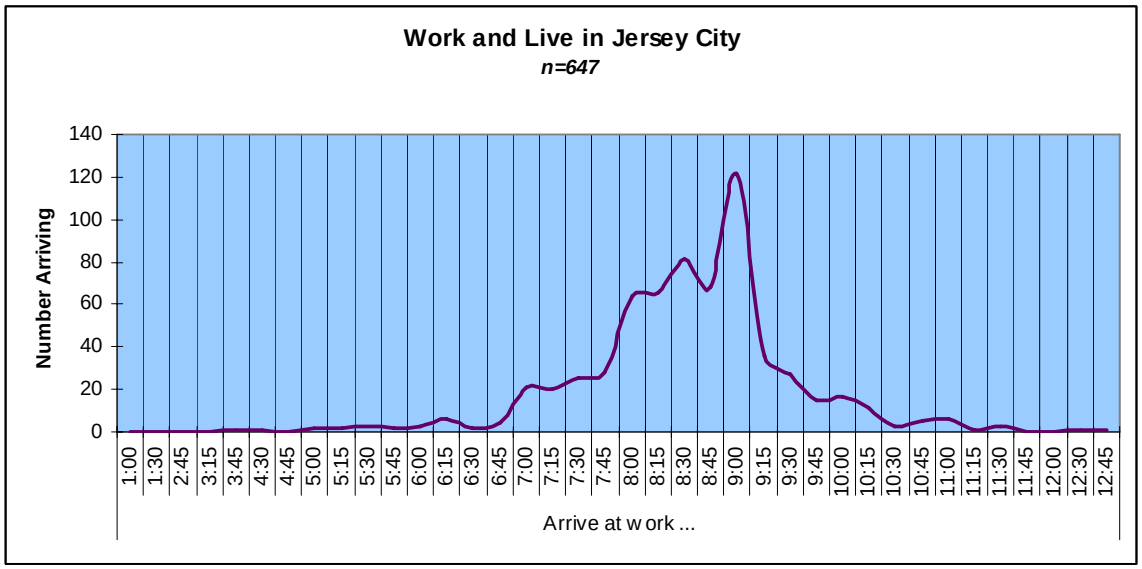

[12] See Technical Appendix for data table.
[13] See Technical Appendix for data table.

The AM duration of travel to work for 97% of respondents living and working within Jersey City is 15 minutes up to one hour. Eighty percent of the respondents in this market segment can get to work within 15 to 30 minutes. Difficulty in AM travel appears to occur for approximately 20% of these Jersey City residents where travel to work exceeds 30 minutes.

Figure 13

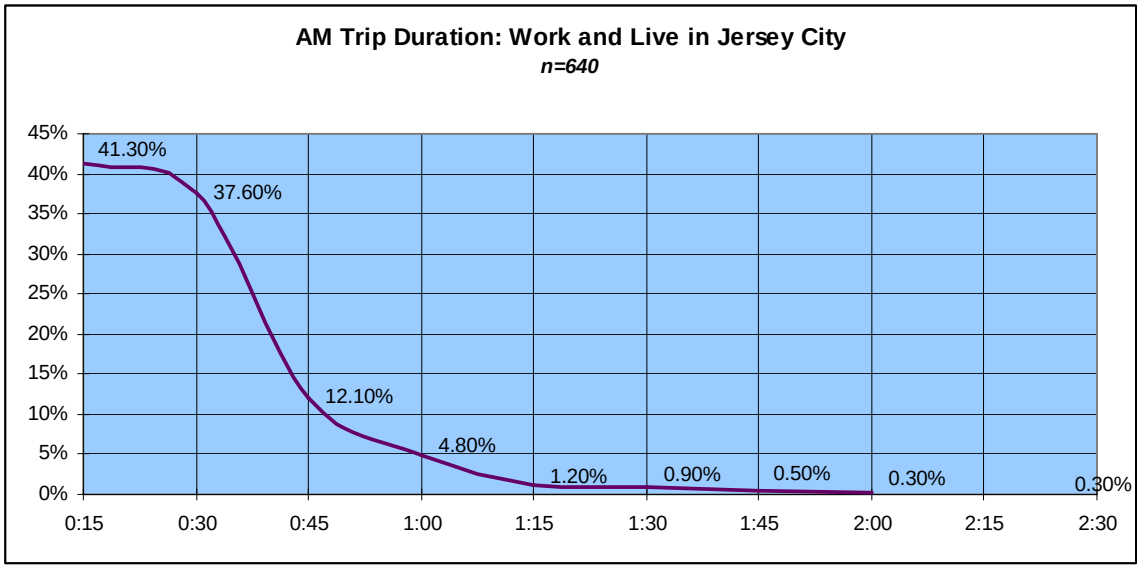

Data Table – AM Trip Duration

Time	Count
0:15	267
0:30	243
0:45	78
1:00	31
1:15	8
1:30	6
1:45	3
2:00	2
2:15	0
2:30	2
2:45	0

A visual comparison of the AM travel duration for all market segments reveals:

- The shortest travel duration is experienced by respondents both living and working in Jersey City – travel duration peaks between 15 and 30 minutes.
- Most people traveling to enter or leave Jersey City in the AM experience longer trip times to get to work – travel duration peaks at 45 minutes for respondents working outside of Jersey City and peaks at 1 hour for those commuting into work locations within Jersey City.

Figure 14

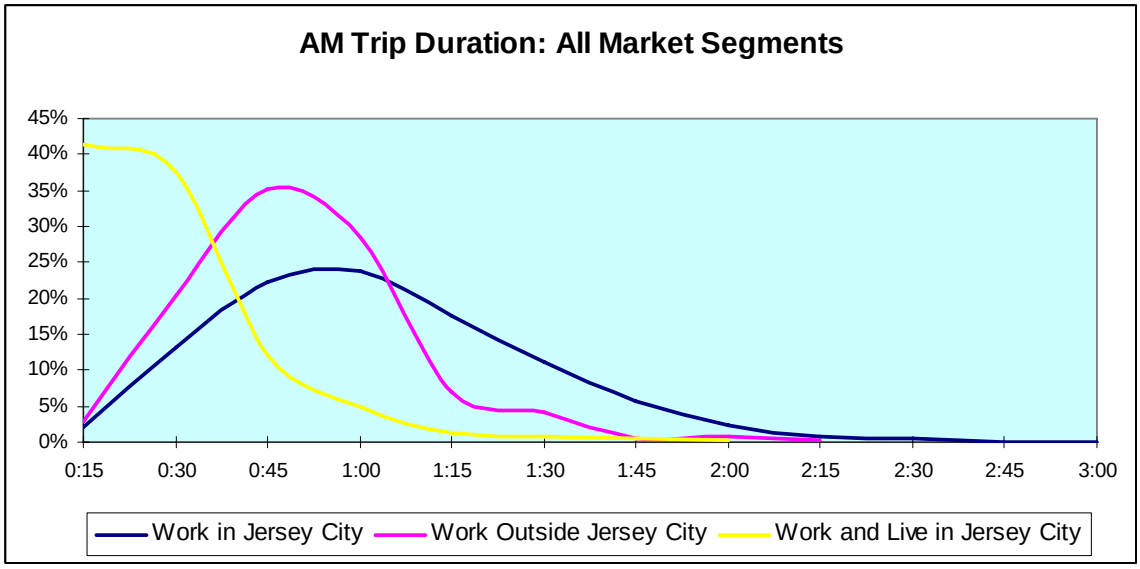

Finally, a combined graph (Figure A: AM Work Travel) giving AM travel time of people who arrive at work from outside Jersey City (Market Segment 1) with people who depart for work within Jersey City (Market Segment 2 and Market Segment 3) shows AM peaking characteristics for all market segments.

Figure A: AM Travel shows that, while specific markets are peaking at different times, the overall busiest time for morning travel within Jersey City among all markets is between 6:00 AM and 10:00 AM. People who come to work from outside Jersey City appear to have two separate peaking times: 7:15 AM and 8:15 AM, while people living within Jersey City whether going to work inside or outside of Jersey City have similar peaking times (around 8:00 to 8:15 AM) when for leaving for work.

Figure A: AM Work Travel

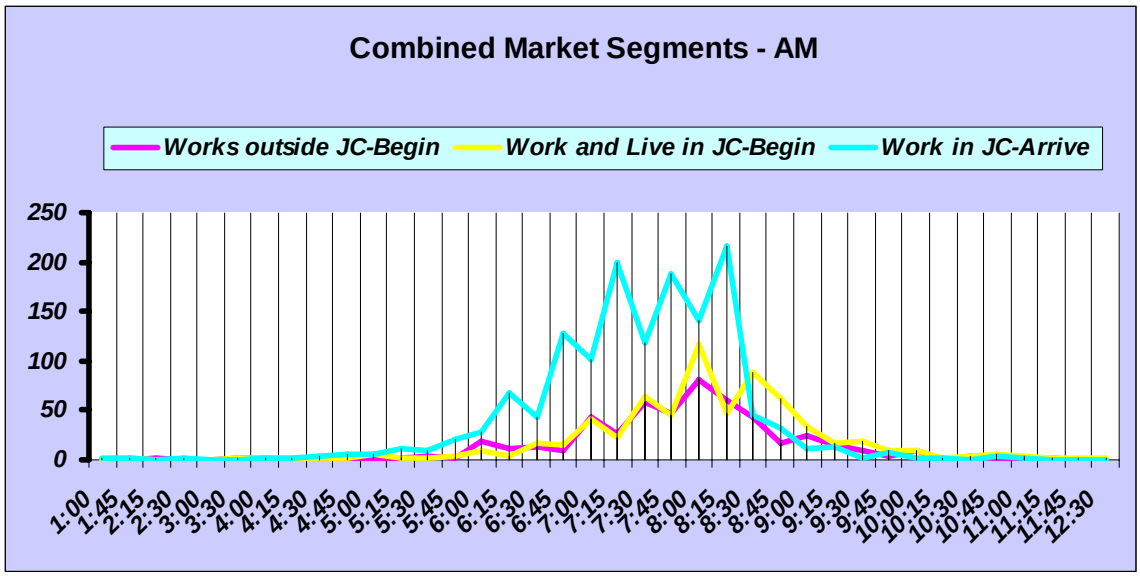

Figures 15 to 24 provide PM travel frequency patterns.

Departure time from work begins at 3:30PM and ends at 8:00PM for most respondents (96%) who "Work in Jersey City." The peak hour is 6:00PM to 7:00PM where 49% of the respondents leave work.

Figure 15[14]

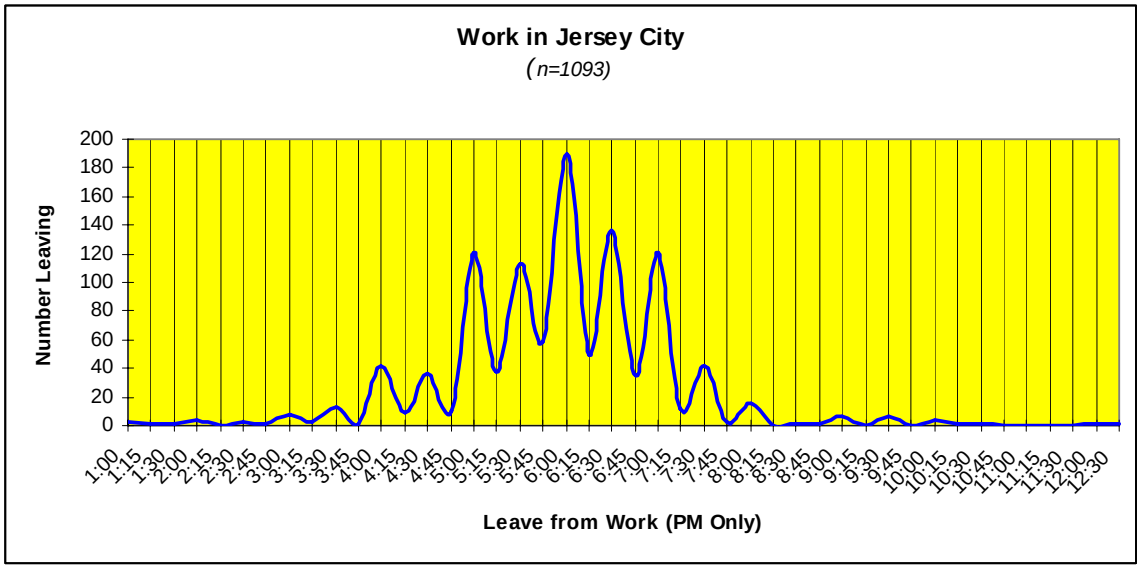

Respondents who "Work in Jersey City" typically begin arriving home between 4:30PM and 9:00PM (95%). The peak hour arrival time at home is 7:00PM to 8:00PM where over 50% are getting to their home destination.

Figure 16[15]

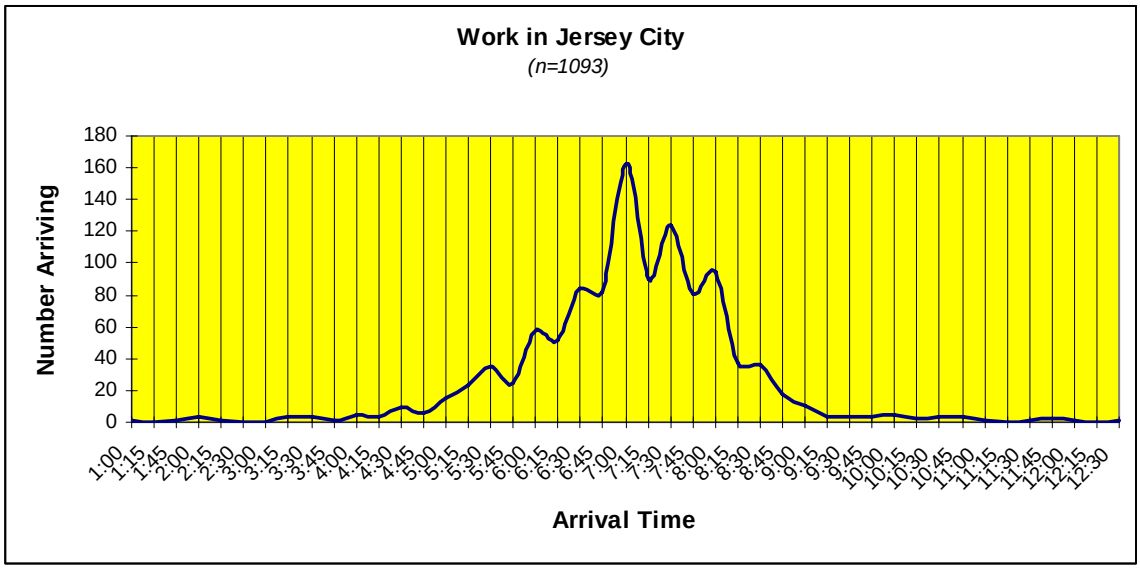

[14] See Technical Appendix for data table..
[15] See Technical Appendix for data table.

Eighty-six percent (86%) of respondents who "Work in Jersey City" take 30 minutes to one and half hours to get home at the conclusion of their normal work day. Forty-eight percent (48%) of respondents travel from 45 minutes to an hour to get home.

Figure 17

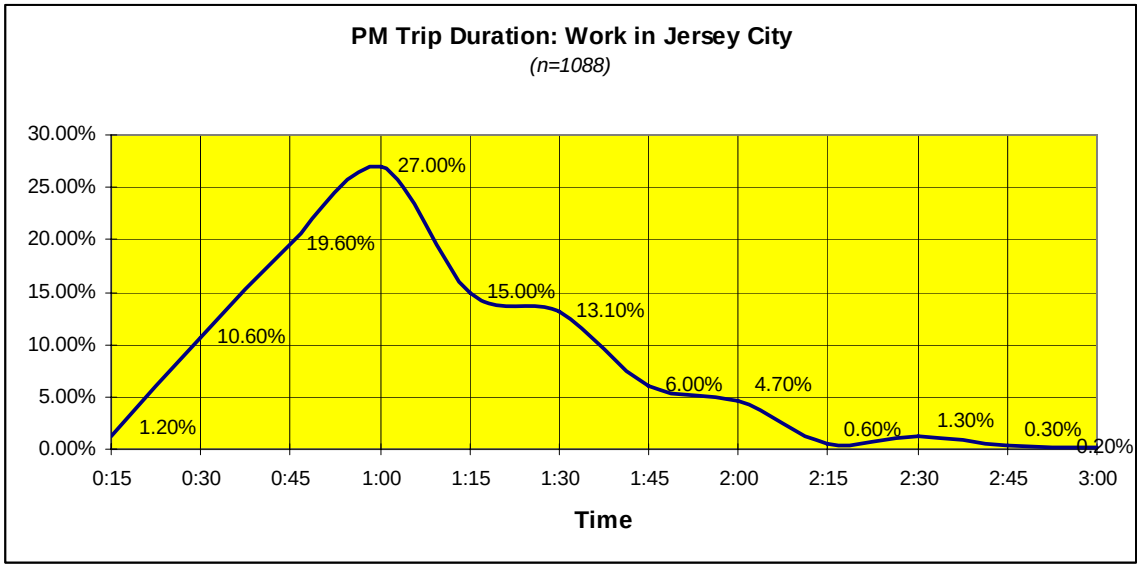

Data Table – PM Trip Duration[16]

Time	Count
0:15	13
0:30	**116**
0:45	**214**
1:00	**295**
1:15	**164**
1:30	**143**
1:45	66
2:00	51
2:15	7
2:30	14
2:45	3
3:00	2

[16] Outliers or respondent errors are not included in the distribution figure or data table.

Respondents (86%) who "Work Outside of Jersey City" leave work between 4:00PM and 7:00PM. These respondents have a peak hour departure from 5:00PM to 6:00PM.

Figure 18[17]

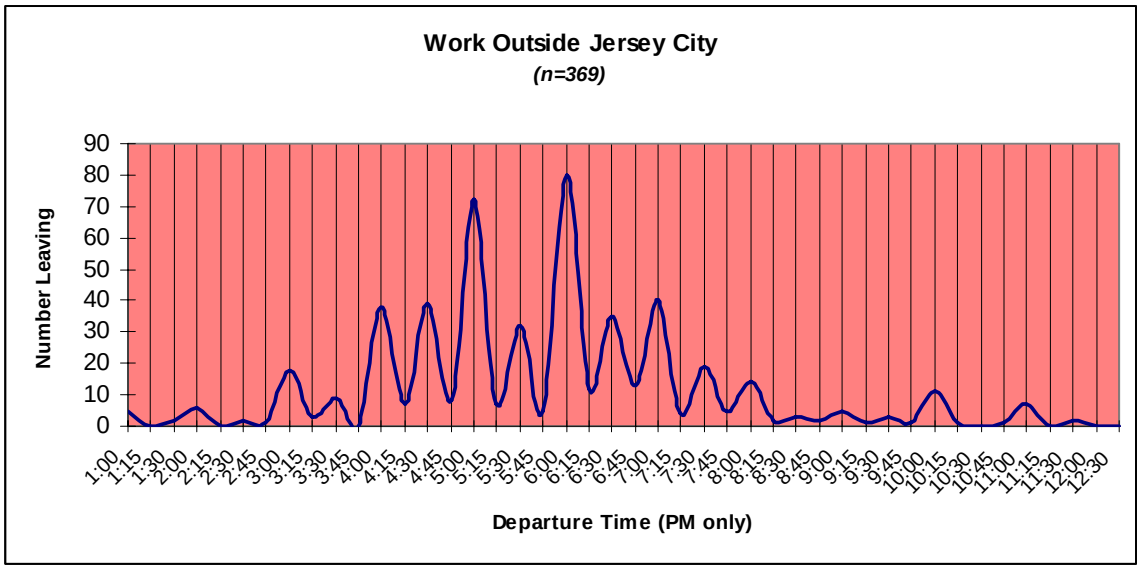

Respondents (88%) working in locations outside of Jersey City begin arriving at home from 5:30PM to 8:30PM. The peak hour arrival time for these respondents is 6:00PM to 7:00PM when 46% arrive at home.

Figure 19[18]

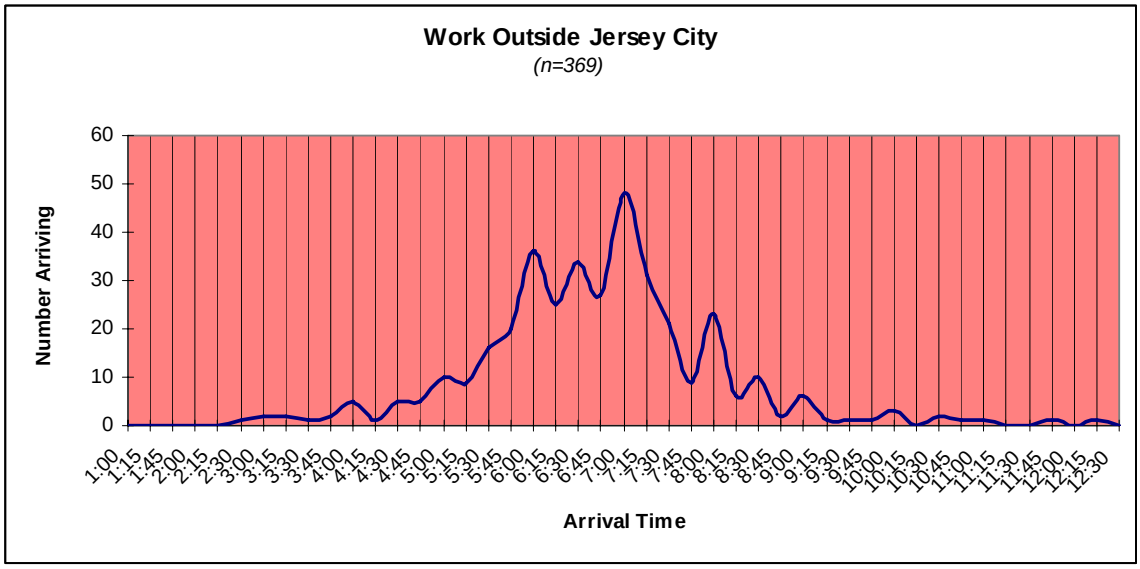

[17] See Technical Appendix for data table.
[18] See Technical Appendix for data table.

Respondents (95%) going to employment outside of Jersey City spend between 30 minutes to one and a half hours getting home. Sixty-two percent take between 45 minutes and one hour to arrive at home.

Figure 20

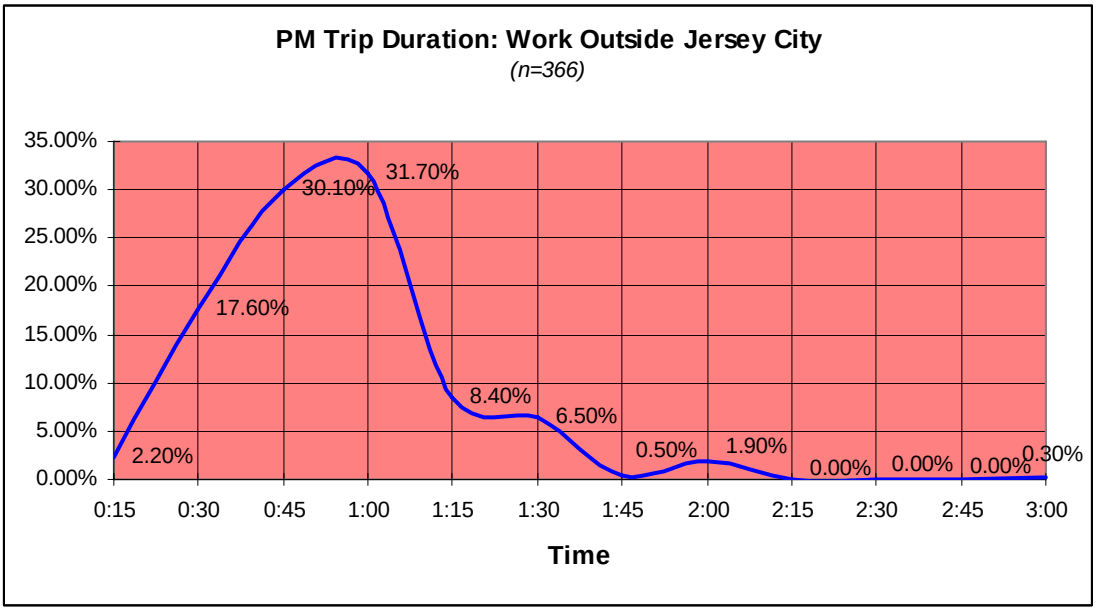

Data Table – PM Trip Duration[19]

Time	Count
0:15	8
0:30	65
0:45	**111**
1:00	**117**
1:15	31
1:30	24
1:45	2
2:00	7
2:15	0
2:30	0
2:45	0
3:00	1

[19] Outliers or respondent errors are not included in the distribution figure or data table.

Respondents (89%) who "Live and Work in Jersey City" begin departing from work locations as early as 3:00PM and as late as 8:00PM. The peak hour for these departures is 5:00PM to 6:00PM.

Figure 21

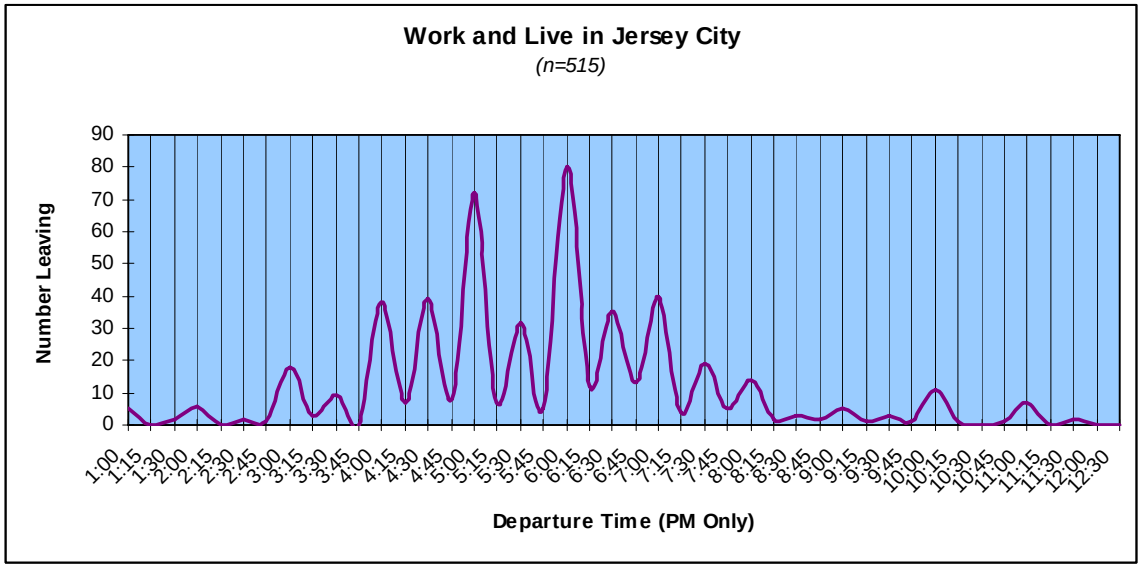

Respondents (85%) both working and living in Jersey City arrive home between 4:00PM and 8:30PM. The peak hour arrival time is 6:00PM to 7:00PM.

Figure 22

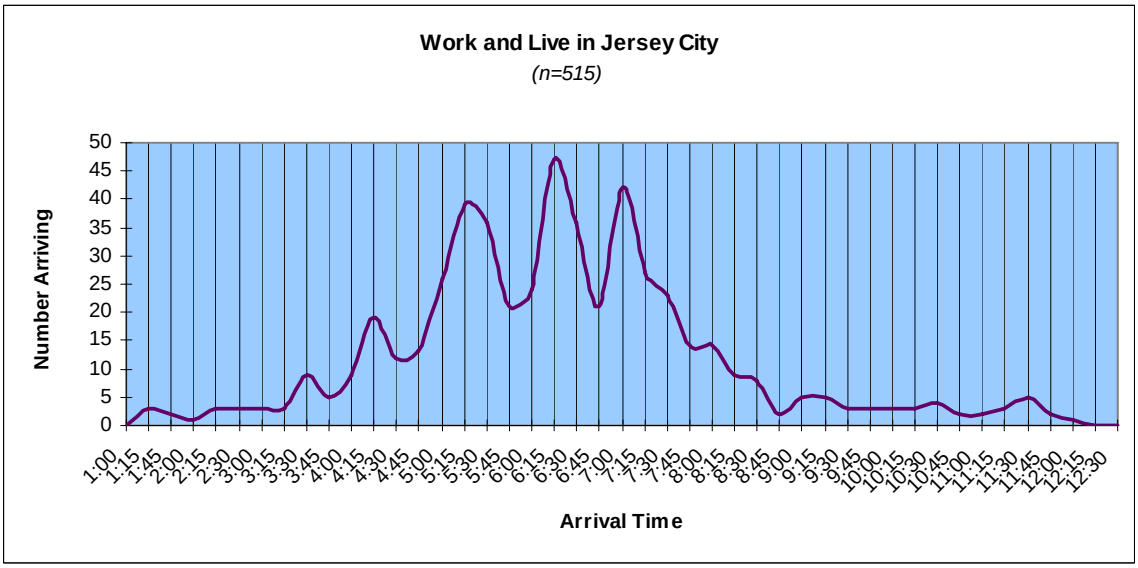

Respondents who "Work and Live in Jersey City" have the shortest travel time to get home from work. Ninety-four percent (94%) experience duration of travel from 15 minutes to one hour when returning home. Seventy-four percent (74%) are home within 15 to 30 minutes.

Figure23

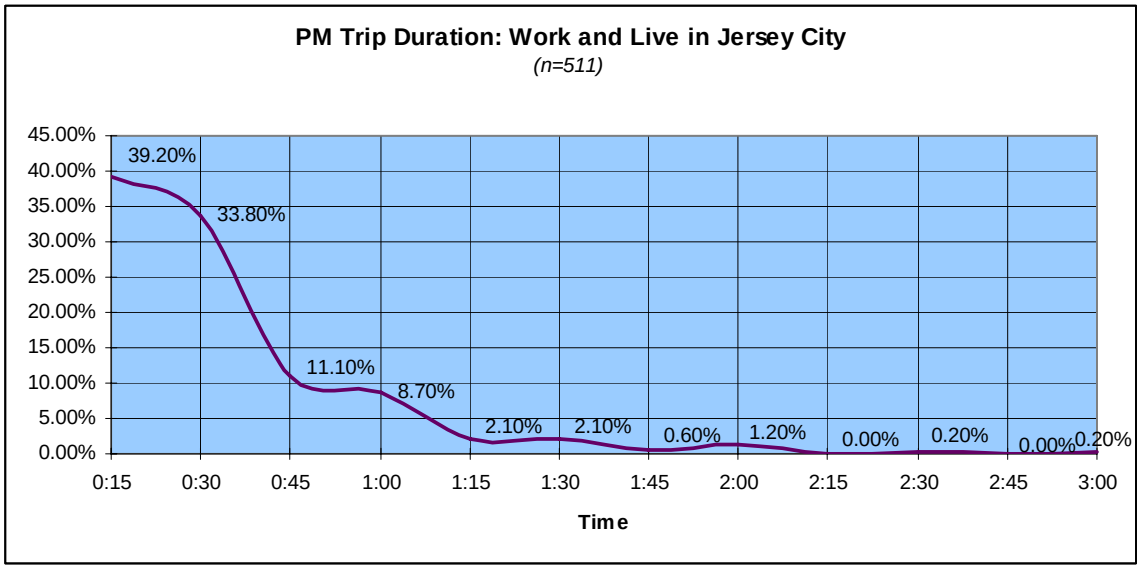

Data Table – PM Trip Duration[20]

Time	Count
0:15	**202**
0:30	**174**
0:45	57
1:00	45
1:15	11
1:30	11
1:45	3
2:00	6
2:15	0
2:30	1
2:45	0
3:00	1

[20] Outliers or respondent errors are not included in the distribution figure or data table.

Comparison of the PM travel duration for all market segments reveals:

- The shortest travel duration in getting home is experienced by respondents both living and working in Jersey City – travel duration peaks between 15 and 30 minutes.
- The longest travel time in getting home occurs for people who have to leave the city to return home (Market Segment 1) and those who return home from jobs outside Jersey City (Market Segment 2).

Figure 24

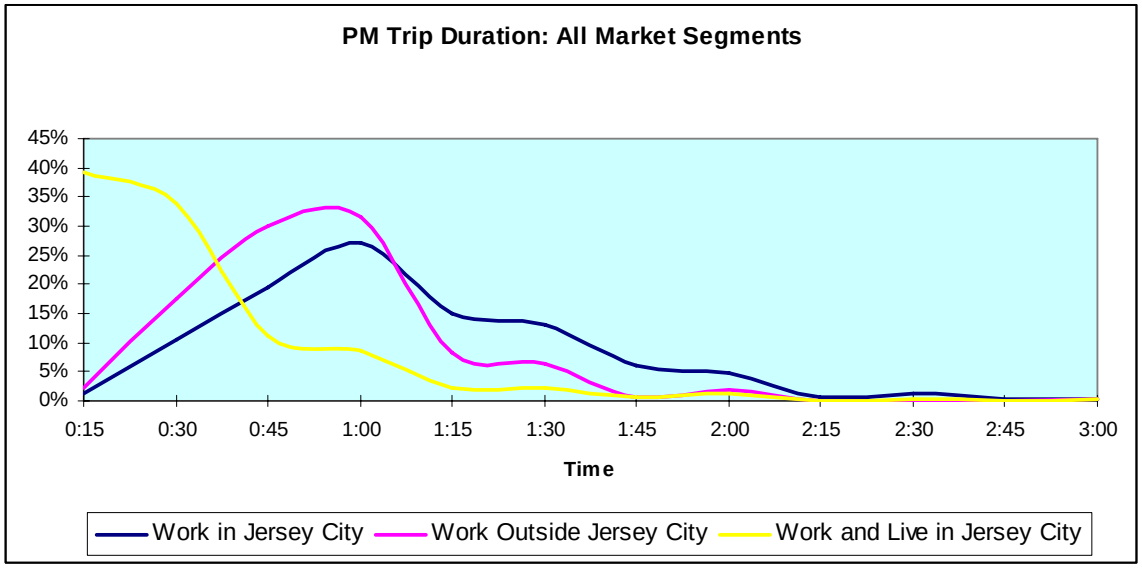

Finally, a combined graph (Figure B: PM Work Travel) giving PM travel time of people who depart from work in Jersey City (people living outside or inside Jersey City) with people who arrive at home in Jersey City from jobs outside shows:

- Travel activity between 3:00 PM and 8:00 PM occurs for at least 90% of the people departing from work within Jersey City.
- Travel activity between
- 3:45 PM and 8:45 PM occurs for 95% of those arriving home from work places outside of Jersey City.
- Travel from work for approximately 75% people:
    - Coming to work from outside Jersey City occurs between 5:00 PM and 7:00 PM; and
    - Between 4:00 PM and 7:00 PM for people living and working within Jersey City.
- Travel for people trying to get home from work places outside Jersey City occurs for approximately 75% during the hours of 5:30PM and 7:45 PM.

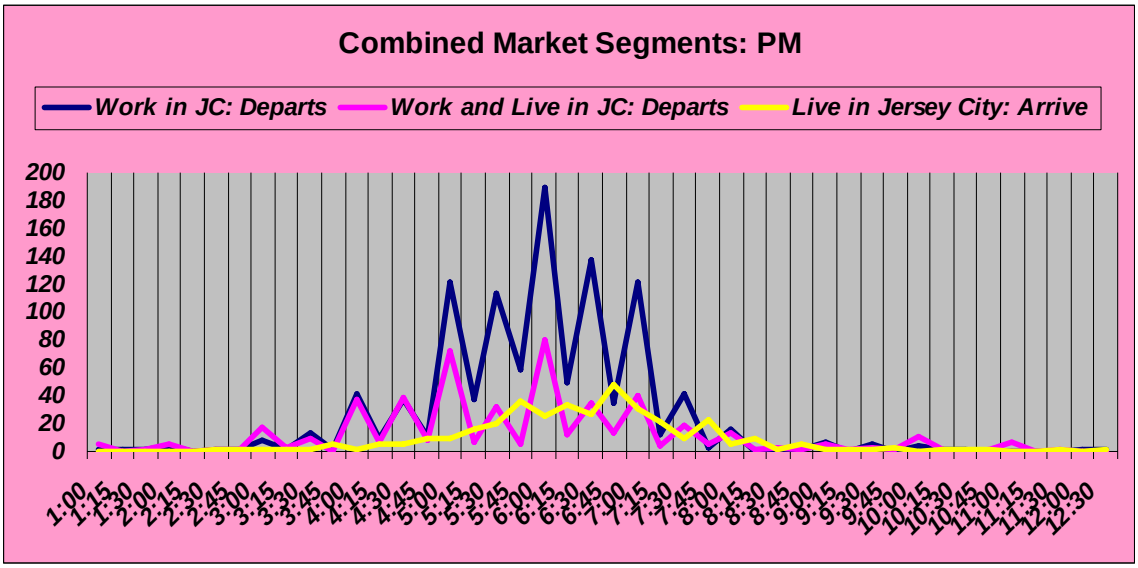

G. Origin and Destination

Overall, one third (33%) of the people surveyed in Market Segment 1 originate mainly from New York counties that are east-of-the-Hudson River (Table 1). In addition, approximately one third (31%) of these respondents go to work in Downtown Jersey City. Respondents residing in New York counties east of the Hudson have significant transit options into Jersey City work locations – PATH, ferry and use of multiple transit modes.

Respondents coming from Monmouth, Middlesex, Union or Ocean counties represent another 20% of the workforce from Market Segment 1 into Jersey City. Sixteen percent (16%) of these respondents are working in Downtown Jersey City. Workers from Monmouth, Middlesex, Union or Ocean counties have good transit and highway access into Jersey City. Possible transit options include driving to the Light Rail Station at Liberty State Park, taking NJ Transit into Hoboken to board PATH into Jersey City, and using bus service into Jersey City.

Table 1

Residential Origins and Work Destinations for Market Segment 1: Work in Jersey City (n=1434)

Origin:	Bergen	Downtown	Greenville	Heights	Journal Square	Lafayette	Marion	All Destinations
Bergen County	7	133	2	1	15	0	1	159
% of Total	*0.5%*	*9.3%*	*0.1%*	*0.1%*	*1.0%*	*0.0%*	*0.1%*	*11.1%*
Essex or Morris	5	119	10	4	14	1	2	155
% of Total	*0.3%*	*8.3%*	*0.7%*	*0.3%*	*1.0%*	*0.1%*	*0.1%*	*10.8%*
Hudson County	7	139	7	7	18	6	5	189
% of Total	*1%*	*10%*	*1%*	*1%*	*1%*	*0%*	*0%*	*13%*
Monmouth, Middlesex, Union or Ocean County	6	235	5	3	32	4	6	291
% of Total	*0.4%*	*16.4%*	*0.3%*	*0.2%*	*2.2%*	*0.3%*	*0.4%*	*20.3%*
Somerset or Warren County	0	32	1	0	2	0	0	35
% of Total	*0.0%*	*2.2%*	*0.1%*	*0.0%*	*0.1%*	*0.0%*	*0.0%*	*2.4%*
Passaic or Sussex	0	27	3	0	3	0	0	33
% of Total	*0.0%*	*1.9%*	*0.2%*	*0.0%*	*0.2%*	*0.0%*	*0.0%*	*2.3%*
Other county in New Jersey	0	21	0	0	1	2	0	24
% of Total	*0.0%*	*1.5%*	*0.0%*	*0.0%*	*0.1%*	*0.1%*	*0.0%*	*1.7%*
New York– east of the Hudson River	8	450	3	1	11	0	0	473
% of Total	*0.6%*	*31.4%*	*0.2%*	*0.1%*	*0.8%*	*0.0%*	*0.0%*	*33.0%*
New York – west of the Hudson River	2	65	0	1	1	1	0	70
% of Total	*0.1%*	*4.5%*	*0.0%*	*0.1%*	*0.1%*	*0.1%*	*0.0%*	*4.9%*
Other	1	3	1	0	0	0	0	5
% of Total	*0.1%*	*0.2%*	*0.1%*	*0.0%*	*0.0%*	*0.0%*	*0.0%*	*0.3%*
All Origins	**36**	**1224**	**32**	**17**	**97**	**14**	**14**	**1434**
% of Total	*2.5%*	*85.4%*	*2.2%*	*1.2%*	*6.8%*	*1.0%*	*1.0%*	*100.0%*

Combined, respondents from Bergen, Essex, Morris counties along with respondents from areas in Hudson County outside of Jersey City represent approximately one-third (respectively 11%, 11% and 13%) of all respondents that reported they "Work in Jersey City". Workers from these origins also have some transit options into Jersey City via multi-modal access through PATH, New Jersey Transit train and bus service, as well as the Hudson-Bergen Light Rail System.

Bergen, Essex, Morris, Hudson, Middlesex, Monmouth, Union and Ocean counties in New Jersey along with areas east-of-the-Hudson River were always expected to provide a major source of workers into Jersey City, primarily into Downtown Jersey City. These expectations were based on previous limited but focused quantitative and qualitative research including employer and resident surveys and evaluation of the enormous commercial and residential growth that was expected. In fact, the expected economic growth is still occurring in Downtown Jersey City.

Original expectations of origin-destination and growth patterns played a major role in planning and designing the Hudson-Bergen Light Rail system now in operation. The 2008 Jersey City Mobility Survey has provided evidence that original expectations were well founded. The mobility survey also provides evidence that Jersey City can continue to look Bergen, Essex, Morris, Hudson, Middlesex, Monmouth, Union and Ocean counties and east-of-the-Hudson as a major origin markets from which to attract workers.

Many people working outside Jersey City (Market Segment 2) came from respondents living in Downtown Jersey City (45% - see Table 2). Many (34%) of these respondents are attracted to work destinations east-of-the Hudson River. Less favorable, but also attractive to respondents living in Downtown Jersey City are work locations in Hudson, Essex, Morris, Monmouth, Middlesex, Union and Ocean counties – combined employment in these areas draw close to another 8% of Downtown Jersey City residents.

Work areas outside of Jersey City on both sides of the Hudson River provide well traveled highway and transit access to respondents living in these Jersey City neighborhoods such as Hudson-Bergen Light Rail to parts of Hudson County; PATH and ferry service into Manhattan; Holland Tunnel and New Jersey Turnpike auto access; and New Jersey Transit train service into Morris, Essex, Monmouth, Middlesex, Union and Ocean counties.

Thirty-eight percent of people responding from Market Segment 2 originate from Greenville, Jersey City Heights and Journal Square neighborhoods – respectively 11%, 17% and 10%. While the distribution of sample from these neighborhoods is quite small[21], it appears that people from these areas are working mainly in Hudson, Essex/Morris counties and east-of-the Hudson.

Table2

Residential Origins and Work Destinations for Market Segment 2: Working Outside Jersey City (excludes non workers); (n=523)

Origin:	Bergen County	Essex or Morris County	Hudson County	Monmouth, Middlesex, Union or Ocean County	Somerset or Warren County	Passaic or Sussex County	Other NJ County	New York counties– east of the Hudson River	New York counties – west of the Hudson River	Other	All Destinations
Bergen	2	4	10	2	0	0	1	26	0	2	47
% of Total	*0.4%*	*0.8%*	*1.9%*	*0.4%*	*0.0%*	*0.0%*	*0.2%*	*5.0%*	*0.0%*	*0.4%*	*9.0%*
Downtown	4	15	16	11	3	1	3	176	2	3	234
% of Total	*0.8%*	*2.9%*	*3.1%*	*2.1%*	*0.6%*	*0.2%*	*0.6%*	*33.7%*	*0.4%*	*0.6%*	*44.7%*
Greenville	2	4	5	4	0	5	2	34	0	0	56
% of Total	*0.4%*	*0.8%*	*1.0%*	*0.8%*	*0.0%*	*1.0%*	*0.4%*	*6.5%*	*0.0%*	*0.0%*	*10.7%*
Heights	1	8	14	1	1	0	2	62	1	0	90
% of Total	*0.2%*	*1.5%*	*2.7%*	*0.2%*	*0.2%*	*0.0%*	*0.4%*	*11.9%*	*0.2%*	*0.0%*	*17.2%*
Journal Square	4	8	3	2	0	1	0	32	1	0	51
% of Total	*0.8%*	*1.5%*	*0.6%*	*0.4%*	*0.0%*	*0.2%*	*0.0%*	*6.1%*	*0.2%*	*0.0%*	*9.8%*
Lafayette	2	2	4	0	0	1	1	18	0	0	28
% of Total	*0.4%*	*0.4%*	*0.8%*	*0.0%*	*0.0%*	*0.2%*	*0.2%*	*3.4%*	*0.0%*	*0.0%*	*5.4%*
Marion	0	5	4	1	0	0	0	4	0	0	14
% of Total	*0.0%*	*1.0%*	*0.8%*	*0.2%*	*0.0%*	*0.0%*	*0.0%*	*0.8%*	*0.0%*	*0.0%*	*2.7%*
Don't' Know/ No Answer	0	0	0	0	0	0	0	3	0	0	3
% of Total	*0.0%*	*0.0%*	*0.0%*	*0.0%*	*0.0%*	*0.0%*	*0.0%*	*0.6%*	*0.0%*	*0.0%*	*0.6%*
All Origins	**15**	**46**	**56**	**21**	**4**	**8**	**9**	**355**	**4**	**5**	**523**
% of Total	***2.9%***	***8.8%***	***10.7%***	***4.0%***	***0.8%***	***1.5%***	***1.7%***	***67.9%***	***0.8%***	***1.0%***	***100.0%***

[21] A minimum sample size of 50 is desired. Smaller sizes may be more indicative of qualitative findings.

Finally, with three exceptions, a greater percentage of respondents surveyed who both "Work and Live in Jersey City" (Market Segment 3) are working within their origin area (e.g. internal-to-internal trip pattern), thus the diagonal of Table 3 is where most of these respondents are going. For example, many of the respondents surveyed who reside in Bergen neighborhoods are also working in the Bergen section of Jersey City (3%). The three exceptions are Greenville, Heights and Lafayette, where Downtown Jersey City is also an attractive employment market for respondents from these neighborhoods. Journal Square residents are primarily working in Journal Square (4%) and Downtown (4%).

Internal-to-internal trip patterns are consistent with patterns found in many transportation studies, including the original survey work done to evaluate, plan and implement mobility strategies in Jersey City for. These original I-I patterns was another significant reason for building the Hudson-Bergen Light Rail.

Overall, the majority of respondents surveyed came from Bergen/Marion combined (100 respondents); Downtown (215 respondents); Greenville (159 respondents); Heights (99 respondents); Journal Square (73 respondents). The number of respondents surveyed from Lafayette neighborhoods (41 respondents) was the smallest sample for any neighborhood.

Table 3

Residential Origins and Work Destinations for Market Segment 2: Work and Live in Jersey City (n=694)

Origin:	Bergen	Downtown	Greenville	Heights	Journal Square	Lafayette	Marion	Other/DK	All
Bergen	19	28	14	0	10	0	5	1	77
% of Total	*2.7%*	*4.0%*	*2.0%*	*0.0%*	*1.4%*	*0.0%*	*0.7%*	*0.1%*	*11.1%*
Downtown	2	182	8	2	16	4	0	1	215
% of Total	*0.3%*	*26.3%*	*1.2%*	*0.3%*	*2.3%*	*0.6%*	*0.0%*	*0.1%*	*31.0%*
Greenville	7	81	34	6	25	4	2	0	159
% of Total	*1.0%*	*11.7%*	*4.9%*	*0.9%*	*3.6%*	*0.6%*	*0.3%*	*0.0%*	*22.9%*
Heights	3	49	7	20	18	1	1	0	99
% of Total	*0.4%*	*7.1%*	*1.0%*	*2.9%*	*2.6%*	*0.1%*	*0.1%*	*0.0%*	*14.3%*
Journal Square	5	29	7	3	27	0	2	0	73
% of Total	*0.7%*	*4.2%*	*1.0%*	*0.4%*	*3.9%*	*0.0%*	*0.3%*	*0.0%*	*10.5%*
Lafayette	6	17	2	0	2	12	2	0	41
% of Total	*0.9%*	*2.5%*	*0.3%*	*0.0%*	*0.3%*	*1.7%*	*0.3%*	*0.0%*	*5.9%*
Marion	5	5	2	2	2	0	7	0	23
% of Total	*0.7%*	*0.7%*	*0.3%*	*0.3%*	*0.3%*	*0.0%*	*1.0%*	*0.0%*	*3.3%*
Other/DK	0	5	0	0	1	0	0	0	6
% of Total	*0.0%*	*0.7%*	*0.0%*	*0.0%*	*0.1%*	*0.0%*	*0.0%*	*0.0%*	*0.9%*
All Origins	**47**	**396**	**74**	**33**	**101**	**21**	**19**	**2**	**693**
% of Total	***0.068***	***0.571***	***0.107***	***0.048***	***0.146***	***0.03***	***0.027***	***0.003***	***1***

H. Mode Share

Transit versus Non Transit share overall and by market segments (Figure 25) are closest to current estimates than are shares reported in the 2000 Journey-to-Work census. The lowest transit share (35%) is among respondents who both "Live and Work in Jersey City" (Market Segment 3). These findings are consistent with qualitative research among respondents who expressed insufficiency in transit services to meet routine needs such as going to work, shopping or recreating within Jersey City. Market segments experiencing higher transit share (Work in Jersey City; Work outside Jersey City) reflects the extensive rail, PATH, ferry, light rail, bus transit network available.

Figure 25

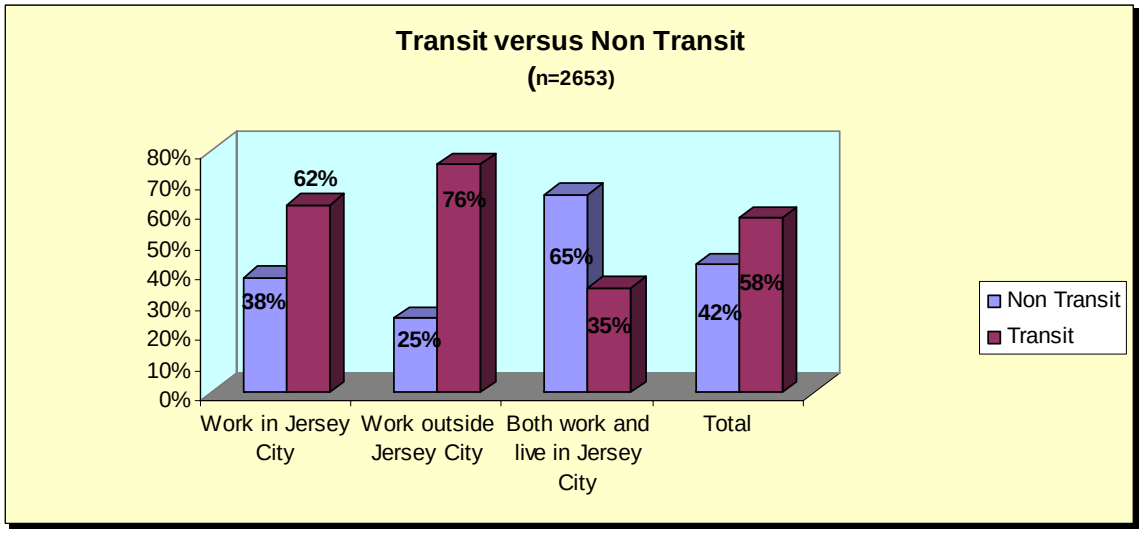

	Work in Jersey City (n=1437)	Work outside Jersey City (n=522)	Both work and live in Jersey City (n=694)	Total (n=2653)
Non Transit	38%	25%	65%	42%
Transit	62%	76%	35%	58%

Transit versus Non Transit share within each market segment to the various employment destinations are shown in figures 26 through 28.

The highest transit share (67%) is found among people going to downtown work locations in Jersey City within Market Segment 1: Work in Jersey City. This outcome is expected due to the many transit options available to these workers.

The lowest transit share is experienced by respondents going to work in Lafayette (14%) Greenville (28%) and Jersey City Heights (28%) illustrating the need to provide a comprehensive transit strategy to serve these neighborhoods.

Figure 26

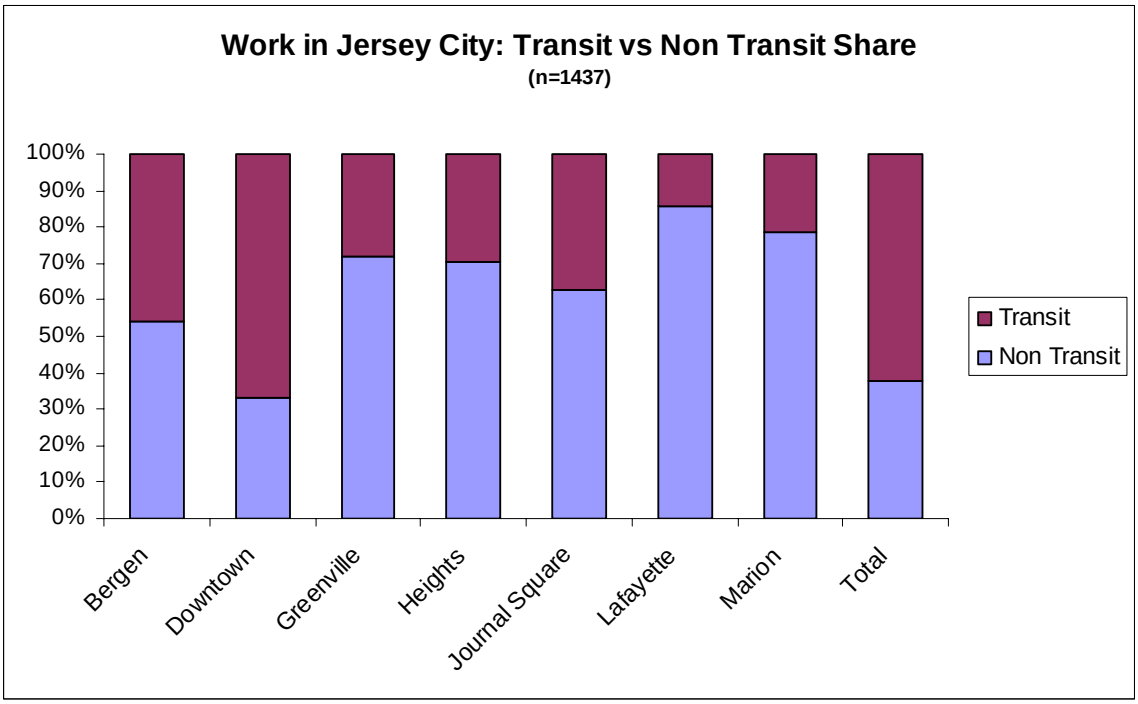

	Bergen	Downtown	Greenville	Heights	Journal Square	Lafayette	Marion	Total
Non Transit	54%	33%	72%	71%	63%	86%	79%	38%
Transit	46%	**67%**	28%	29%	37%	14%	21%	62%

Transit share for respondents working outside Jersey City (Market Segment 2) are shown in Figure 27. The highest transit share (95%) is from respondents commuting to work to locations east-of-the Hudson River – also an expected outcome due to high transit availability into New York City.

The lowest transit share (13%) is experienced by respondents going to work in Bergen, Sussex or Warren locations.

Figure 27

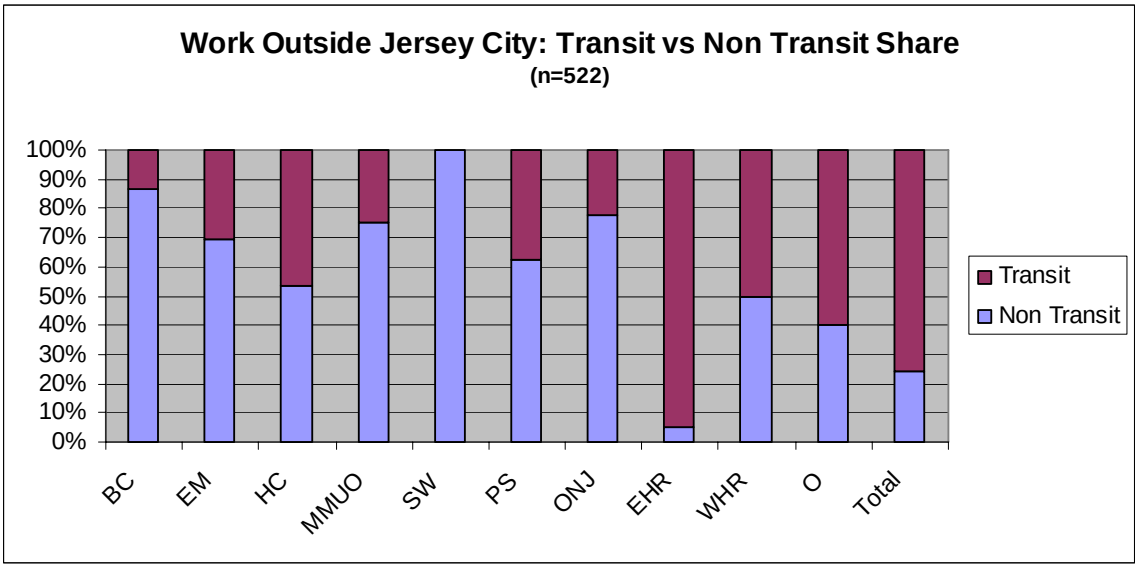

	BC	EM	HC	MMUO	SW	PS	ONJ	EHR	WHR	O	Total
Non Transit	87%	70%	54%	75%	100%	63%	78%	5%	50%	40%	25%
Transit	**13%**	30%	46%	25%	**0%**	38%	22%	**95%**	50%	60%	76%

Key

BC=Bergen County	EM=Essex or Morris County	HC=Hudson County	MMUO=Monmouth, Middlesex, Union or Ocean County	SW=Somerset or Warren County	PS=Passaic or Sussex County	ONJ=Other NJ County	EHR=New York counties– east of the Hudson River	WER=New York counties – west of the Hudson River	O=Other (please specify)

Finally, the transit share among respondents who both "Live and Work in Jersey City" is provided in Figure 28. Transit share seems to reflect the experience many respondents living and working in Jersey City are having - limited transit options, limited knowledge regarding availability of existing services, transit and neighborhood connectivity and sufficient capacity. For instance:

> *"Please increase the frequency of the path on the weekends"*
> *"Traveling to Exchange Place is very difficult from the Heights sometimes 3 buses are used just to get to work .Light rail is an option but not easier in the cold…"*
> *"It is time to expand the light rail so that it can go to the Square, especially since the square is being rebuilt"*
> *"In the Greenville section of Jersey City there needs to be more bus service during the off rush hour service for senior citizens. The wait time is 30 to 45 minutes for a bus"*
> *"The recent elimination of several bus routes to my place of employment (Newport center Mall) caused significant inconvenience, particularly since the last buses often end before my evening shift ends at the mall"*
> *"Would like to be able to get to work without always driving. Maybe some shuttle from Journal Square to Sip Ave*
> *and U.S. Hwy #1"*

Jersey City residents destined to employment locations within Jersey City Heights have the lowest transit share (18%).

Figure 28

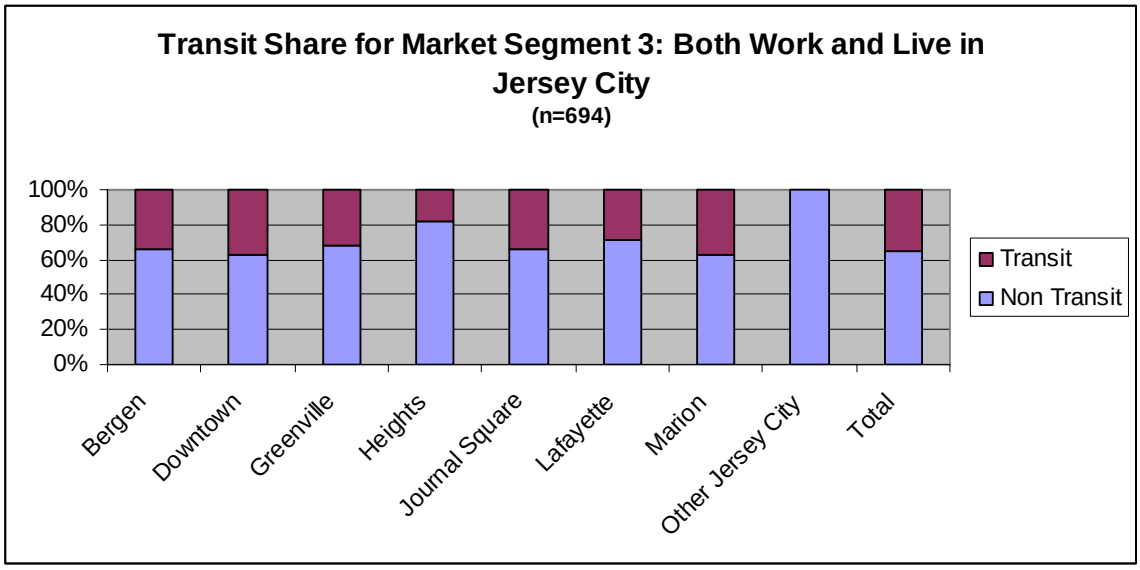

	Bergen	Downtown	Greenville	Heights	Journal Square	Lafayette	Marion	Other Jersey City	Total
Non Transit	66%	63%	68%	82%	66%	71%	63%	100%	65%
Transit	34%	37%	32%	**18%**	34%	29%	37%		35%

The Jersey City 2050 Mobility Study included questions on modes used by respondents to get to work. Results are shown in figures 29 through 31. Respondents who "Work in Jersey City" access work locations in Jersey City primarily using transit. For instance 42% appear to use a multi-modal system to get to work, 10% on PATH and 6% on Light Rail. One-third of these respondents use single-occupancy driving to get to work.

Figure 29

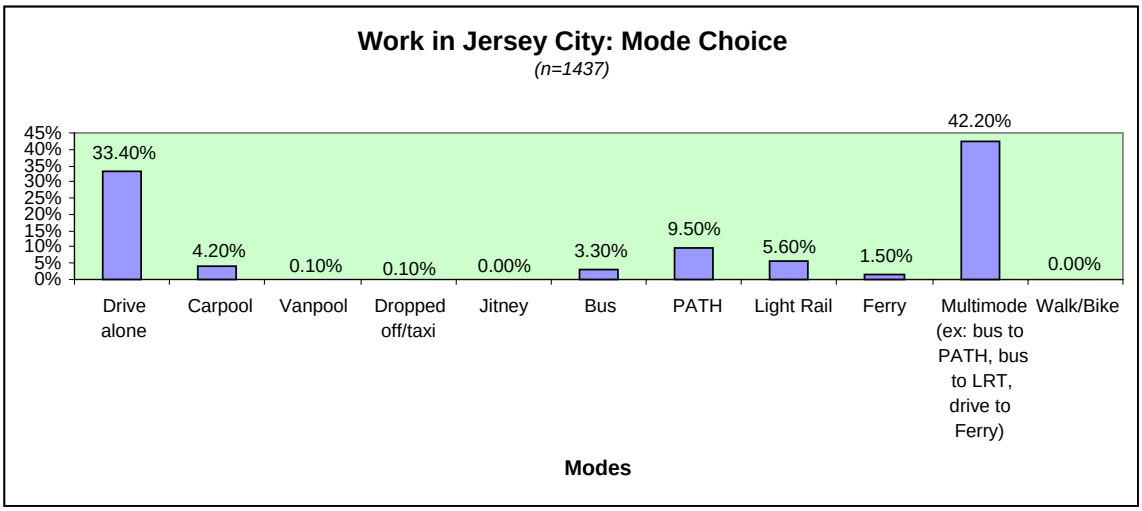

Respondents who "Work outside Jersey City" also make use of various transit options in getting to work. Forty percent (40%) use PATH, 24% exercise multi-modal choice and 7% take bus to work. Twenty-one percent (21%) of these "Work in Jersey City" respondents take a car to work.

Figure30

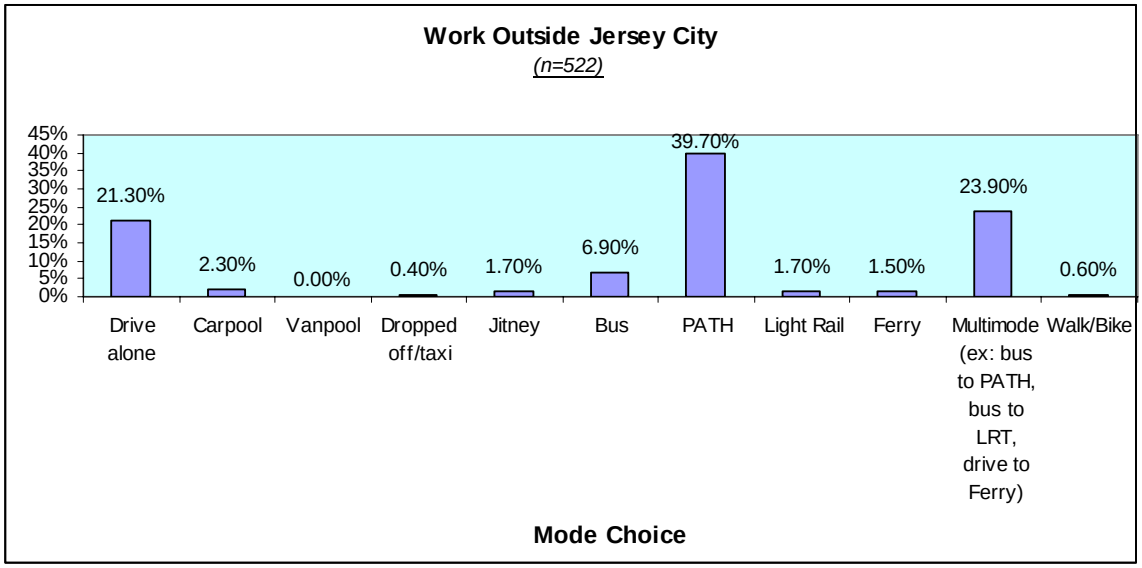

Respondents both working and living in Jersey City use less transit and are walking and biking to work (26%) more. These respondents also have the highest use of "drive alone" (35%) as a means to get to work. These findings provide further evidence for the need to support "walk and bike" strategies within Jersey City and to explore ways to increase transit usage. The opportunity for increased transit use is demonstrated by the respective 13%, 7% and 9% use of bus, PATH and Light Rail as a means of traveling to work among respondents who "Work and Live in Jersey City."

Figure 31

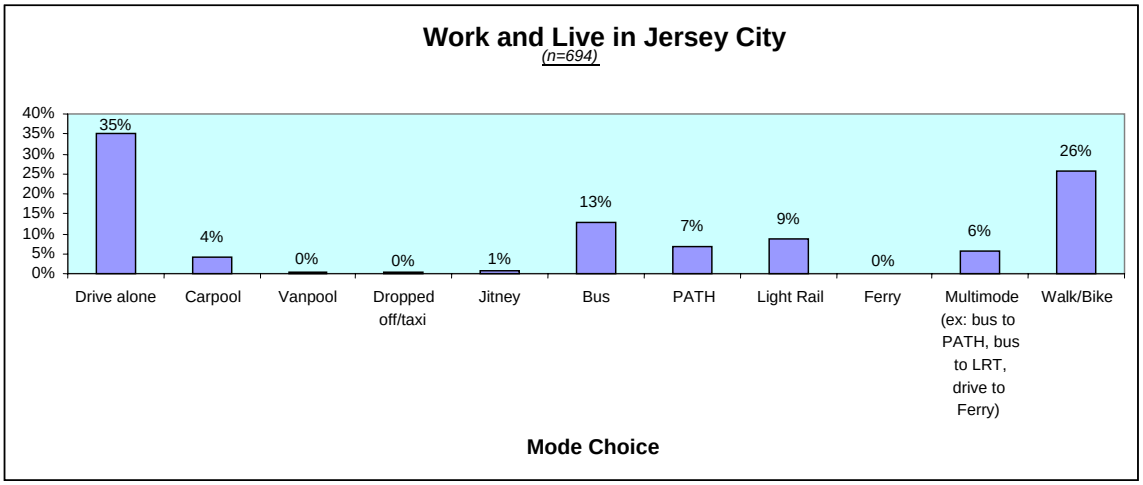

I. Preferences, Attitudes and Ratings

A large percentage of respondents stated that transit is not their primary mode for traveling. Thus, a planning challenge includes developing transportation strategies to decrease this percentage.

Respondents provided clues on what should be included in these transportation strategies based on their responses to "*Which characteristics would you require, to consider using mass transit as your primary mode of travel?*"

Figure 32

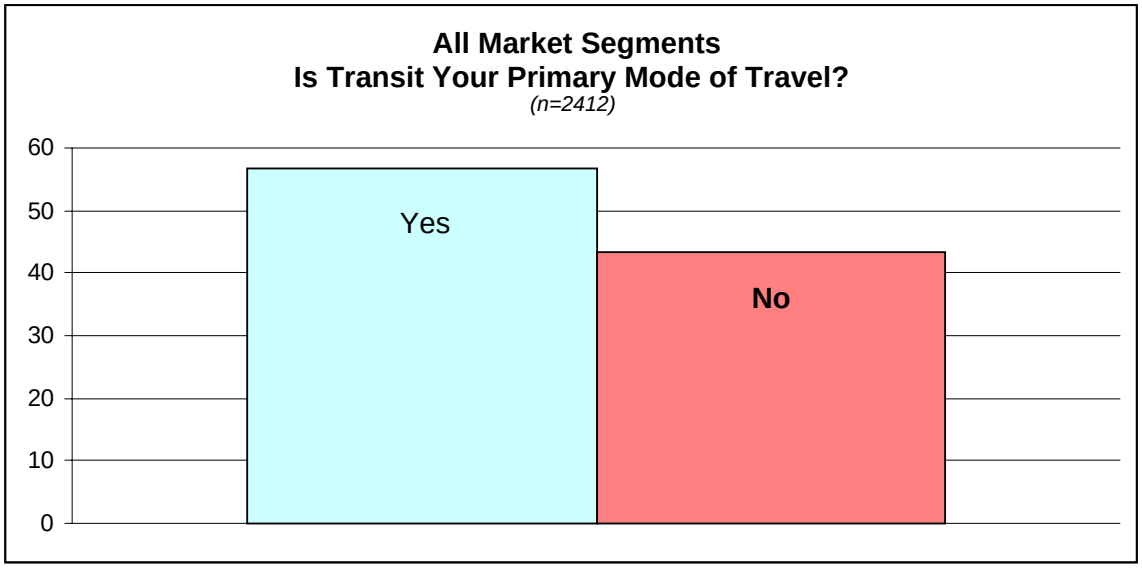

Data Table[22]

Yes	1366
No	1046
Total	2412

A total of 1,046 respondents stated they do not use transit as their primary mode of travel. These respondents were given 13 characteristics[23] to select from in choosing their 1st, 2nd and 3rd highest priority in answering the question *"Which characteristics would you require to consider using mass transit as your primary mode of travel?"* Reporting their selection of the number one priority, the following observation is made.

- 49% said *"Stops close to home"* is number one
- 40% said *"Service is cheaper than driving"* is number one
- 36% said *"Service is safe"* is number one

In addition, 52% gave "Other" as their number one priority. The types of concerns listed among these respondents include the following.

[22] Non responders are not included.

[23] Stops close to home; stops close to work; short trip times; frequent service; reliable service; service is safe; service is cheaper than driving; stops are near other services; schedules are clear and easy to use; information on transit services is readily available; information on transit services is always up to date

"No easy way to get to the Upper East Side. I would have to take at least 5 trains to get to work!"
"Disabled, walking difficult"
"(Service) must be the fastest mode to be useful"
"(Service is) Clean, no bums"
"(I am) not familiar with mass transit schedules"
"(Service must be) bicycle friendly"
"(Service must have) handicapped accessibility"
"(Service must have) monthly passes available"
"All (are number one priority)"
"(Service must be a) 7-day a week service"
"Light rail station (is) easier to get to"
"Leaves early enough (5:30 am or earlier) from my town and late enough from JC (up to 7pm or later)"
"Overall trip is faster than driving"
"Express Service-No Transfers"
"(There should be) one price per trip not per mode (i.e. pay once for trip using light rail and PATH)"
"Security for parked vehicles/bicycles at the mass transit stations"
"Free transfers to PATH and more EXPRESS Trains with less stops"
"I'd use light rail to Hoboken & train to Mahwah daily if there was a shuttle to work at Mahwah stop"
"Better service for disabled people"
"Access to City Vehicle"
"# of modes/connections"
"I have 3 kids - public transport is a hassle with all the crap we lug around."
"Less Crowded on PATH"
"Something is wrong with my car"

Respondents who stated transit is not their primary mode gave lower ratings on their "*overall impression concerning transit service…*" when considering travel "to Jersey City"; as compared to respondents who are "Primary Transit Users." Only 23% of Non Primary Transit Users gave an overall impression of transit service an "8 to 10" rating. In contrast, 34% of Primary Transit Users gave an "8 to 10" rating.

In addition, twenty percent (20%) of Non Primary Transit Users gave a poor rating (1 to 3) of transit service to Jersey City, while only 14% of Primary Transit Users gave this same rating. Notably, neither group had a majority (51% or higher) giving a rating of 8 to 10 which may suggest improvement is needed in existing transit service "to" Jersey City.

Figure 33: Travel to Jersey City

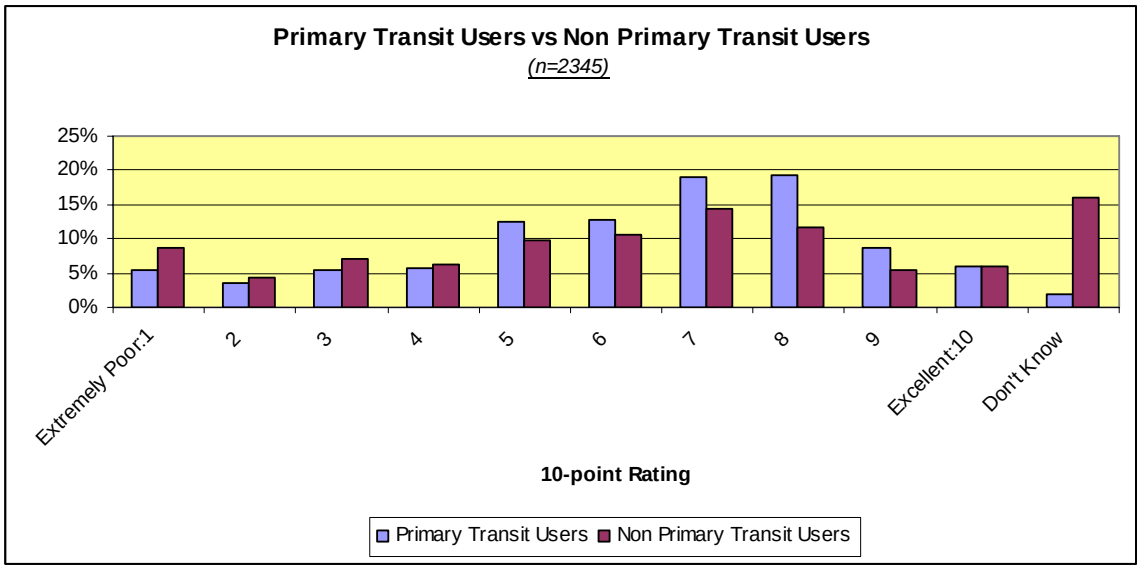

Data Table: Ratings on Overall Impression of Transit Service: to Jersey City

		Primary Transit User	Non Primary Transit User
Extremely Poor:1		72	85
	2	47	43
	3	73	69
	4	76	61
	5	169	95
	6	174	104
	7	261	142
	8	264	116
	9	119	52
Excellent:10		81	59
Don't Know		27	156
Total responding		1363	982

Impressions on overall transit services for travel "Within Jersey City" is relatively similar among Primary Transit Users and Non Primary Transit Users. Around 4% of both groups gave an 8 to 10 rating on their impression of transit services within Jersey City. These groups also had similar percentages of respondents (17%) rating transit services poor (1 to3) for travel within Jersey City.

Figure 34: Travel within Jersey City

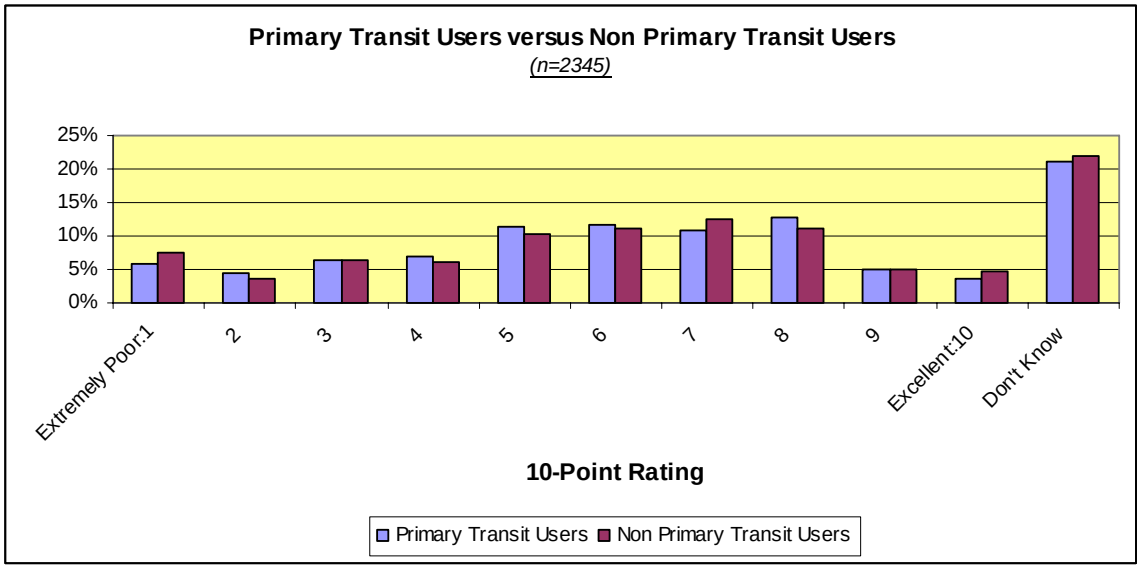

Data Table: Ratings on Overall Impression of Transit Services: within Jersey City

		Primary Transit User	Non Primary Transit User
Extremely Poor:1		81	73
	2	60	34
	3	86	63
	4	94	59
	5	155	102
	6	159	108
	7	149	122
	8	175	109
	9	70	50
Excellent:10		48	47
Don't Know		286	215
Total responding		1363	982

Perceptions among Non Primary Transit Users versus Primary Transit Users are not hugely different for travel from Jersey City to elsewhere. Respectively 21% and 26% of the respondents rated transit services to other places outside of Jersey City as being excellent or close to it ("8 to 10" to rating). Alternatively 17% and 16% of the respondents respectively gave a rating of 1 to 3 to indicate how poor they believed services from Jersey City to places outside of Jersey City are perceived.

Figure 35: Travel from Jersey City

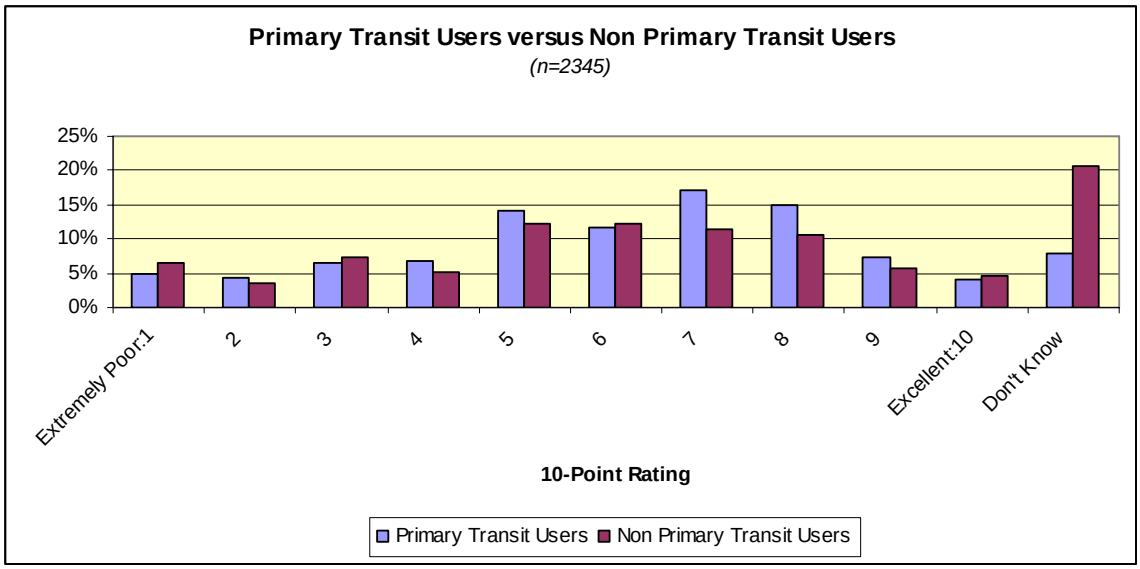

Data Table: Ratings on Overall Impression of Transit Services: from Jersey City

	Yes: Primary Transit User	No: Non Primary Transit User
Extremely Poor:1	67	64
2	58	33
3	90	72
4	91	51
5	194	121
6	161	121
7	235	112
8	204	103
9	99	57
Excellent:10	55	45
Don't Know	109	203
	1363	982

All respondents were asked to rank 13 characteristics[24] to answer the question "*What are the five most important characteristics that make a great transit system*" along with and option to provide an open-end response. The following observation is made based on looking at the selection of the single most important characteristic chosen by the respondents (2,799).

- 31% chose *"Stops close to home"*
- 30% chose *"Frequent service"*
- 24% chose *"Service is safe"*
- 22% chose *"Service is reliable"*
- 17% chose *"Service is cheaper than driving"*

In addition, 32% of these respondents chose "Other" and their comments include the following.
"Less crowded PATH trains"
"Longer service hours"
"(Service is) not too crowded"
"(It should be a) clean system"
"These are all important"
"Handi-cap Accessible"
"Light rail should also travel along the track W of Tonnelle Avenue from N tip of N Bergen to Journ(al) Square"
"Few intermodal transfers"
"Run according to the schedule"
"(Better weekend service) - service on weekends is deplorable"
"No crowding/comfortable ride"
"Choice of other bus lines within my neighborhood"
"Alert/sober drivers"
"State of the art vehicles, non-polluting, quiet, comfortable"
"Handicapped accessible/stroller friendly"
"Bicycle friendly"
"Direct - no connections"
"Monthly passes available for adults and children"
"(Should have) trash cans please"
"All (characteristics are important)"
"Less crowded platforms"
"More service during late night and weekend"
"Stops are accessible to safe parking"
"Later service and more frequent than currently at off-peak hrs"
"One price per trip not per mode"
"(Service should be) comprehensive-not just limited to a few areas or stops"
"Free Transfers between different modes - i.e. PATH to Light rail"

[24] Stops close to home; stops close to work; short trip times; frequent service; reliable service; service is safe; service is cheaper than driving; stops are near other services; schedules are clear and easy to use; information on transit services is readily available; information on transit services is always up to date.

Respondents were asked to tell "How likely are you to change the way you commute to work?" after viewing 12 different transportation improvement strategies[25].

The five characteristics that received the greatest percentage of respondents giving a rating of 8 to 10 among people who "Work in Jersey City" are:

- Telecommuting or Tele-working (53%)
- Commute alternative subsidies (46%
- Flextime (39%)
- Employer-sponsored shuttle services (35%)
- Car availability in emergency (28%)

The top five characteristics among respondents who "Work outside Jersey City" are:

- Commute alternative subsidies (44%)
- Telecommuting or Tele-working (43%)
- Flextime (38%)
- Facilities to walk/bike to work (32.3%)
- Employer-sponsored shuttle services (31.5%)

The transportation improvement strategies most desired by respondents who "Work and Live in Jersey City" are:

- Telecommute or Tele-work (37%)
- Commute alternative subsidies (35.6%) and Flextime (35.6%)
- Facilities to walk/bike to work (35.5%)
- Employer-sponsored shuttle services (32.8%)
- Car availability in emergency (30%)

These rankings across all three market segments are remarkably consistent and provide strong evidence that the transportation improvement strategies identified would likely have a favorable influence on decreasing auto use to, from and within Jersey City. Most specifically, employers located within Jersey City that attract people who live outside or within Jersey City can have an influence on reducing auto traffic by implementing these specific improvements.

[25] Join a carpool or vanpool; Join a car-sharing program; Preferential parking at the workplace; Parking "cash out;" Car available at workplace for use in emergency; Commute alternative subsidies; Flextime; Telecommuting or Teleworking; Employer-subsidized vanpool; Employer-subsidized carpool; Employer-sponsored shuttle services to/from transit stops/stations; Facilities to make it easier to walk or bike to work.

Respondents were asked to "*Please rank the transportation goals to tell us your priorities for travel in Jersey City*" and their rankings by market segments are provided in the table below. These rankings are noted in order of priority based on the percentage of respondents who gave a top 2-box rating (i.e. a rating of 1 or 2, where 1 is the highest priority and 5 is the lowest).

Table 4: Transportation Priority Goals

Transportation Goal	**Work in Jersey City**	**Work outside Jersey City**	**Work and Live in Jersey City**
Reduce motor vehicle accidents *(n=841)*	10	**3**	8
Improve bicycling safety and security *(n=519)*	9	9	7
Improve pedestrian safety and security *(n=1143)*	**5**	**5**	**2**
Improve pedestrian safety around schools *(n=552)*	8	8	**5**
Increase transit options *(n=1567)*	**2**	**1**	**3**
Fix and maintain existing roads and bridges *(n=1531)*	**3**	**4**	**1**
Fix and maintain existing transit systems *(n=1517)*	**1**	**2**	6
Reduce congestion on all roads *(n=1355)*	**4**	7	**4**
Emphasize more pedestrian and bicycle travel *(n=685)*	7	10	10
Reduce/eliminate auto traffic in selected areas *(n=841)*	6	11	9
Reduce travel speeds by traffic calming methods *(n=443)*	11	6	11

Generally, the top five ranked transportation goals are desired by respondents across all three market segments. The difference is that respondents who work outside Jersey City also view reducing motor vehicle accidents as a key goal and .respondents who work and live in Jersey City believe improving pedestrian safety around schools is also important.

- Fix and maintain existing transit systems
- Increase transit options
- Fix and maintain existing roads and bridges
- Reduce congestion on all roads
- Improve pedestrian safety and security

Another need for the Jersey City 2050 Mobility Study was to understand ways in which respondents prefer to receive information about transit service for travel to, from and within Jersey City. The findings are noted in Table 5 below with highlights on the communication channels that have 35% or more of the respondents saying "yes" as the choice preference in each market segment. The Internet/Website and Email communication channels are favorites among respondents in all three market segments. These channels had at least a majority of the respondents saying "yes." Receiving transit information from their employer is desired among people who "Work in Jersey City" and getting transit information from the newspaper is desired by 36% of the respondents who "Work and Live in Jersey City."

Table 5: Receiving Transit Information Preferences; (n=2238)

Communication Preferences	**Work in Jersey City**	**Work outside Jersey City**	**Work and Live in Jersey City**
Word-of-mouth/from a friend	13.5%	19.9%	17.1%
Radio/TV	20.1%	30.6%	29.1%
Newspaper	18.6%	**40.4%**	**36.1%**
Internet/Website	**51.2%**	**55.0%**	**49.7%**
Email	**50.2%**	**47.8%**	**41.1%**
Direct mailing/Brochure	9.4%	29.4%	27.3%
From my employer	**51.1%**	8.2%	25.9%

J. Non Work Patterns

Respondents gave some non work behavior patterns in the Jersey City 2050 Mobility Study. This non work behavior was identified for the weekday and the weekend. In general, the main purpose of non work trips by market segment is listed in Table 6 below using only the highest trip frequencies (e.g. at least once a week for weekday trips; and at least one day for weekend trips. Trips incurring with this frequency for 5% or more of the respondents in each market are highlighted. In summary, the purpose of most weekday trips is as follows.

Purpose	Weekday	Weekend
Work in Jersey City		
Pick-up/Drop-off Work/Transit		
Pick-up/Drop-off School/Daycare		
Attending School		
Going to a Second Job		
Grocery Shopping	✓	
Retail Shopping, Cleaners, etc.	✓	
Medical Visit		
Cultural Events		
Dining & Entertainment	✓	
Sports and Recreation	✓	
Visiting Religious Institutions		
Visiting Friends	✓	
Miscellaneous Errands	✓	
Work outside Jersey City		
Pick-up/Drop-off Work/Transit	✓	
Pick-up/Drop-off School/Daycare	✓	
Attending School	✓	
Going to a Second Job		
Grocery Shopping	✓	✓
Retail Shopping, Cleaners, etc.	✓	✓
Medical Visit		
Cultural Events	✓	
Dining & Entertainment	✓	✓
Sports and Recreation	✓	✓
Visiting Religious Institutions	✓	✓
Visiting Friends	✓	✓
Miscellaneous Errands	✓	✓
Work and Live in Jersey City		
Pick-up/Drop-off Work/Transit	✓	
Pick-up/Drop-off School/Daycare	✓	
Attending School	✓	
Going to a Second Job	✓	
Grocery Shopping	✓	✓
Retail Shopping, Cleaners, etc.	✓	✓
Medical Visit		
Cultural Events	✓	✓
Dining & Entertainment	✓	✓
Sports and Recreation	✓	✓
Visiting Religious Institutions	✓	✓
Visiting Friends	✓	✓
Miscellaneous Errands	✓	

Table 6: Non Work Trip Purpose

n=2741						*n=2542*					
Q19		***Work in JC***	***Work Outside***	***Work & Live in JC***	***All Segments***	***Q20***		***Work in JC***	***Work Outside***	***Work & Live in JC***	***All Segments***
Pick-up/Drop-off Work/Transit Stop	1 to 4 times a week	1.78%	**5.90%**	**9.29%**	4.63%	**Pick-up/Drop-off Work/Transit Stop**	Every Saturday	0.53%	1.01%	1.46%	0.87%
	Daily	2.14%	2.72%	**6.05%**	3.25%		Every Sunday	0.0%	0.17%	0.65%	0.20%
							Every Saturday and Sunday	0.23%	1.17%	1.79%	0.83%
Pick-up/Drop-off School/daycare	1 to 4 times a week	2.43%	**4.54%**	**5.60%**	3.72%	**Pick-up/Drop-off School/daycare**	Every Saturday	0.23%	0.50%	1.14%	0.51%
	Daily	3.14%	**10.14%**	**13.57%**	7.41%		Every Sunday	0.08%	0.34%	0.16%	0.16%
							Every Saturday and Sunday	0.23%	1.51%	0.97%	0.71%
School	1 to 4 times a week	1.78%	**4.84%**	**7.67%**	3.98%	**School**	Every Saturday	0.08%	1.01%	2.44%	0.87%
	Daily	0.50%	3.48%	3.54%	1.97%		Every Sunday	0.08%	0.67%	0.32%	0.28%
							Every Saturday and Sunday	0.15%	1.01%	0.49%	0.43%
Second Job	1 to 4 times a week	1.93%	1.66%	**8.85%**	3.58%	**Second Job**	Every Saturday	0.30%	1.34%	2.76%	1.14%
	Daily	0.36%	0.76%	3.10%	1.13%		Every Sunday	0.23%	0.84%	0.32%	0.39%
							Every Saturday and Sunday	0.75%	1.51%	3.73%	1.65%
Grocery Shopping	1 to 4 times a week	**13.55%**	**50.68%**	**47.49%**	30.90%	**Grocery Shopping**	Every Saturday	3.08%	**20.64%**	**20.78%**	11.49%
	Daily	0.14%	2.42%	2.80%	1.35%		Every Sunday	2.56%	**14.93%**	**8.60%**	6.92%
							Every Saturday and Sunday	2.03%	**12.08%**	**12.82%**	7.00%
Retail Shopping/Cleaners…	1 to 4 times a week	**13.55%**	**44.48%**	**42.48%**	28.16%	**Retail Shopping, Cleaners, etc.**	Every Saturday	3.61%	**18.29%**	**16.23%**	10.11%
	Daily	0.50%	1.82%	2.95%	1.42%		Every Sunday	0.98%	2.68%	2.76%	1.81%

								Every Saturday and Sunday	2.93%	**16.61%**	**14.77%**	9.01%
Medical Visit	1 to 4 times a week	1.28%	4.08%	4.42%	2.74%	**Medical Visits**	Every Saturday	0.08%	0.67%	1.46%	0.55%
	Daily	0.07%	0.30%	0.29%	0.18%		Every Sunday	0.15%		0.65%	0.24%
							Every Saturday and Sunday	0.38%	0.67%	0.97%	0.59%
Cultural Events	1 to 4 times a week	2.07%	**9.98%**	**12.39%**	6.53%	**Cultural Events**	Every Saturday	0.53%	3.02%	4.38%	2.05%
	Daily	0.07%	0.45%	0.59%	0.29%		Every Sunday		2.18%	0.81%	0.71%
							Every Saturday and Sunday	0.98%	4.19%	4.06%	2.48%
Dining and Entertainment	1 to 4 times a week	**14.34%**	**37.97%**	**40.86%**	26.60%	**Dining and Entertainment**	Every Saturday	2.33%	**14.26%**	**11.69%**	7.40%
	Daily	0.93%	1.06%	2.65%	1.39%		Every Sunday	0.30%	3.19%	3.57%	1.77%
							Every Saturday and Sunday	3.61%	**17.45%**	**21.10%**	11.09%
Sports and Recreation	1 to 4 times a week	**6.49%**	**20.27%**	**20.06%**	13.17%	**Sports and Recreation**	Every Saturday	1.20%	**6.88%**	**8.28%**	4.25%
	Daily	0.36%	1.66%	2.95%	1.31%		Every Sunday	0.53%	3.19%	2.11%	1.53%
							Every Saturday and Sunday	2.78%	**10.07%**	**13.47%**	7.08%
Religious Institution	1 to 4 times a week	2.92%	**11.35%**	**16.52%**	8.32%	**Religious Institutions**	Every Saturday	0.38%	1.85%	2.11%	1.14%
	Daily	0.21%	1.06%	1.33%	0.69%		Every Sunday	3.91%	**20.64%**	**25.00%**	12.94%
							Every Saturday and Sunday	0.60%	1.01%	4.38%	1.61%
Friends	1 to 4 times a week	**9.84%**	**34.95%**	**35.69%**	22.29%	**Friends**	Every Saturday	2.18%	**9.56%**	**9.90%**	5.78%
	Daily	0.14%	2.72%	3.98%	1.71%		Every Sunday	0.38%	3.86%	2.44%	1.69%
							Every Saturday and Sunday	3.31%	**18.62%**	**20.45%**	11.05%

Misc.	1 to 4 times a week	**15.26%**	**38.28%**	**35.84%**	25.90%	**Misc.**	Every Saturday	3.46%	**18.79%**	**21.59%**	11.45%
	Daily	1.43%	**5.90%**	**11.36%**	4.96%		Every Sunday	0.90%	1.51%	1.14%	1.10%
							Every Saturday and Sunday	4.06%	**29.19%**	**26.14%**	15.30%

Respondents also provided information on the destination of their trips during the weekday in Question 19 of the mobility survey. The results are summarized below

- If respondents *(n=285)* were **picking/up dropping off someone at work or transit stop**, then the following shows the top destinations by market segment.

Destination	Work in Jersey City	Work outside Jersey City	Both Work and Live in Jersey City	All Market Segments
Jersey City Downtown, but not in Lafayette	36.2%	44.0%	32.8%	37.5%
Jersey City Heights area/neighborhood		9.0%	11.2%	8.4%
Journal Square area/neighborhood		13.0%	19.0%	13.3%
Bayonne	7.2%			
New York counties – east of the Hudson River	10.1%			

- If respondents *(n=319)* were **dropping off or picking up someone from school or day care**, then the following are the top destinations by market segment.

Destination	Work in Jersey City	Work outside Jersey City	Both Work and Live in Jersey City	All Market Segments
Jersey City Downtown, but not in Lafayette	22.4%	39.4%	29.6%	30.7%
Jersey City Bergen area/neighborhood			13.3%	
Jersey City Greenville area/neighborhood			14.8%	8.5%
Jersey City Heights area/neighborhood		12.1%		7.2%
Journal Square area/neighborhood		8.1%		
Monmouth, Middlesex, Union or Ocean County	15.3%			
New York counties – east of the Hudson River	12.9%			

- If respondents *(n=179)* were **attending school**, then the following are the top destinations by market segment.

Destination	Work in Jersey City	Work outside Jersey City	Both Work and Live in Jersey City	All Market Segments
Jersey City Downtown, but not in Lafayette			15.9%	10.1%
Journal Square area/neighborhood	10.8%	18.5%	23.9%	19.6%
Monmouth, Middlesex, Union or Ocean County	10.8%			
Essex or Morris County		9.3%		
New York counties – east of the Hudson River	18.9%	20.4%	14.8%	17.3%
New York counties – west of the Hudson River	13.5%			

- If respondents *(n=148)* were **going to a second job**, then the following are the top destinations by market segment.

Destination	Work in Jersey City	Work outside Jersey City	Both Work and Live in Jersey City	All Market Segments
Jersey City Downtown, but not in Lafayette	10.3%	8.7%	15.1%	12.8%
Jersey City Greenville area/neighborhood		8.7%	14.0%	10.1%
Bergen or Passaic County	10.3%	8.7%		
Essex or Morris County		13.0%		
Monmouth, Middlesex, Union or Ocean County	10.3%			
New York counties – west of the Hudson River	10.3%	30.4%	11.6%	14.2%

- If respondents *(n=1332)* were going **grocery shopping** as part of their trip to work, then the following are the top destinations identified by market segment.

Destination	Work in Jersey City	Work outside Jersey City	Both Work and Live in Jersey City	All Market Segments
Jersey City Downtown, but not in Lafayette	13.0%	50.8%	43.1%	37.9%
Jersey City Greenville area/neighborhood			11.3%	6.6%
Journal Square area/neighborhood		8.1%	8.9%	7.1%
Hoboken		7.3%		
Monmouth, Middlesex, Union or Ocean County	14.1%			
New York counties – west of the Hudson River	20.8%			

- If respondents (n=1325) were **stopping at retail stores, going to cleaners** or similar places, then the following are the top destinations by market segment.

Destination	Work in Jersey City	Work outside Jersey City	Both Work and Live in Jersey City	All Market Segments
Jersey City Downtown, but not in Lafayette	24.8%	51.9%	46.1%	41.5%
Jersey City Greenville area/neighborhood			8.8%	
Jersey City Heights area/neighborhood		6.2%	7.3%	
Journal Square area/neighborhood		7.3%		6.0%
Monmouth, Middlesex, Union or Ocean County	19.6%			
New York counties – west of the Hudson River	19.6%			8.2%

- If respondents *(n=250)* take opportunities to make a **medical visit** during the week, then the key destinations are the following.

Destination	Work in Jersey City	Work outside Jersey City	Both Work and Live in Jersey City	All Market Segments
Jersey City Downtown, but not in Lafayette	11.0%	8.8%	16.5%	12.4%
Jersey City Greenville area/neighborhood		8.8%		
Journal Square area/neighborhood		10.0%	14.4%	9.2%
Bayonne			11.3%	
Essex or Morris County	8.2%			
New York counties – west of the Hudson River	30.1%	17.5%		18.4%

- If respondents *(n=486)* visit **cultural events** during the week, then the key destinations are the following.

Destination	Work in Jersey City	Work outside Jersey City	Both Work and Live in Jersey City	All Market Segments
Jersey City Downtown, but not in Lafayette	7.7%	22.8%	17.6%	17.5%
New York counties – east of the Hudson River	49.0%	47.1%	35.2%	42.8%
New York counties – west of the Hudson River		5.8%		
Other	9.6%		9.8%	7.2%

- If respondents *(n=1309)* take **dining and entertainment** trips during the week, then the following are the top destinations identified.

Destination	Work in Jersey City	Work outside Jersey City	Both Work and Live in Jersey City	All Market Segments
Jersey City Downtown, but not in Lafayette	25.6%	41.8%	31.3%	32.5%
Hoboken	8.5%	8.0%		8.3%
New York counties – east of the Hudson River	23.4%	21.6%	15.6%%	20.2%
Other			8.7%	

- If respondents *(n-616)* go to **sports and recreation events** during the week, then the following destinations are key locations visited.

Destination	Work in Jersey City	Work outside Jersey City	Both Work and Live in Jersey City	All Market Segments
Jersey City Downtown, but not in Lafayette		32.1%	26.3%	23.5%
Jersey City Heights area/neighborhood			9.3%	
Hoboken		9.6%		
Monmouth, Middlesex, Union or Ocean County	11.1%			
New York counties – east of the Hudson River	27.5%	11.5%	10.2%	15.4%
Other	9.9%			8.1%

- If respondents *(n=409)* visit **religious institutions** during the week, then the key destinations are the following.

Destination	Work in Jersey City	Work outside Jersey City	Both Work and Live in Jersey City	All Market Segments
Jersey City Bergen area/neighborhood			11.4%	9.8%
Jersey City Downtown, but not in Lafayette		23.4%	18.4%	17.4%
Jersey City Greenville area/neighborhood		12.1%	16.8%	12.0%
Jersey City Heights area/neighborhood		13.5%		
Essex or Morris County	10.8%			
Monmouth, Middlesex, Union or Ocean County	18.1%			
New York counties – east of the Hudson River	21.7%			

- If respondents *(n=1096)* are ***visiting friends***, then the following are key places.

Destination	Work in Jersey City	Work outside Jersey City	Both Work and Live in Jersey City	All Market Segments
Jersey City Downtown, but not in Lafayette	10.6%	20.8%	16.8%%	16.6%
New York counties – east of the Hudson River	25.7%	18.1%	11.3%	1764%
Other	9.9%	6.9%%	11.0%	9.2%

- If respondents *(n=1262)* are doing **miscellaneous errands**, then the following is the top three destinations.

Destination	Work in Jersey City	Work outside Jersey City	Both Work and Live in Jersey City	All Market Segments
Jersey City Downtown, but not in Lafayette	17.8%	34.9%	26.8%%	26.3%
Journal Square area/neighborhood			8.0%	
Monmouth, Middlesex, Union or Ocean County	9.1%			
New York counties – east of the Hudson River	21.0%	9.0%		11.9%
Other		10.7%	13.4%	10.3%

Information provided on the trip destination during weekend trips in Question 20 is summarized below.

- If respondents *(n=116)* were **picking up/dropping off someone on the weekend at work or a transit stop**, then the following are the top destinations for this activity.

Destination	Work in Jersey City	Work outside Jersey City	Both Work and Live in Jersey City	All Market Segments
Jersey City Bergen area/neighborhood	23.5%		9.8%	9.5%
Jersey City Downtown, but not in Lafayette	23.5%	33.3%	23.5%	27.6%
Jersey City Heights area/neighborhood	11.8%		11.8%	
Hoboken		12.5%	11.8%	10.3%
Essex or Morris County	11.8%			
Other			9.8%	

- If respondents *(n=59)* were **dropping off/picking up someone at school or daycare**, then the following are the top destinations for this activity.

Destination	Work in Jersey City	Work outside Jersey City	Both Work and Live in Jersey City	All Market Segments
Jersey City Bergen area/neighborhood	15.4%			
Jersey City Downtown, but not in Lafayette	15.4%	30.0%	19.2%	22.0%
Jersey City Heights area/neighborhood			23.1%	13.6%
Journal Square area/neighborhood		15.0%		
Essex or Morris County	15.4%			
Other New Jersey		10.0%		
New York counties – east of the Hudson River	15.4%			
Other		10.0%	15.4%%	

- If respondents *(n=52)* spend time **attending school** on the weekend, then the main destinations are the following.

Destination	Work in Jersey City	Work outside Jersey City	Both Work and Live in Jersey City	All Market Segments
Jersey City Bergen area/neighborhood	25.0%			
Jersey City Downtown, but not in Lafayette		14.3%		
Jersey City Greenville area/neighborhood		14.3%	8.7%	
Jersey City Heights area/neighborhood		13.0%		
Journal Square area/neighborhood	12.5%	14.3%	8.7%	11.5%
Other New Jersey	12.5%			
New York counties – east of the Hudson River	12.5%	19.0%	13.0%	15.4%
New York counties – west of the Hudson River	12.5%			
Other	12.5%	9.5%	26.1%	17.3%

- If respondents *(n=107)* go to **second jobs** during the weekend, then the following are the top destinations.

Destination	Work in Jersey City	Work outside Jersey City	Both Work and Live in Jersey City	All Market Segments
Jersey City Bergen area/neighborhood	12.0%		11.7%	10.3%
Jersey City Downtown, but not in Lafayette	16.0%	13.6%	16.7%	15.9%
Jersey City Heights area/neighborhood		9.1%		
Journal Square area/neighborhood	8.0%	9.1%		
Bergen or Passaic County	8.0%		8.3%	
Essex or Morris County	8.0%	13.6%		
Other New Jersey		9.1%		
New York counties – east of the Hudson River	8.0%%	13.6%		
Other	12.0%	13.6%	11.7%	12.1%

- If respondents *(n=1002)* were going **grocery shopping** during the weekend, then the most visited destinations are as follows.

Destination	Work in Jersey City	Work outside Jersey City	Both Work and Live in Jersey City	All Market Segments
Jersey City Downtown, but not in Lafayette		51.3%	38.3%	38.7%
Jersey City Greenville area/neighborhood			11.8%	7.0%
Jersey City Heights area/neighborhood			7.2%	5.8%
Journal Square area/neighborhood		7.4%		
Hoboken		7.1%		
Bayonne	9.0%			
Essex or Morris County	9.0%			
Monmouth, Middlesex, Union or Ocean County	13.9%			
New York counties – east of the Hudson River	12.7%			

- If respondents *(n=977)* were **shopping at retail establishments, visiting cleaners and other similar establishments**, then the following are the most visited destinations by market segment.

Destination	Work in Jersey City	Work outside Jersey City	Both Work and Live in Jersey City	All Market Segments
Jersey City Downtown, but not in Lafayette	18.1%	46.8%	39.4%	38.2%
Jersey City Greenville area/neighborhood			8.7%	
Journal Square area/neighborhood		7.0%		
Monmouth, Middlesex, Union or Ocean County	14.4%			
New York counties – east of the Hudson River	9.6%	6.8%		6.2%
Other			9.4%	6.1%

- If respondents *(n=182)* were **visiting medical establishments**, then the following are their top destinations.

Destination	Work in Jersey City	Work outside Jersey City	Both Work and Live in Jersey City	All Market Segments
Jersey City Bergen area/neighborhood			10.2%	
Jersey City Downtown, but not in Lafayette		12.5%	17.0%	12.6%
Jersey City Greenville area/neighborhood	7.9%	8.9%		
Jersey City Heights area/neighborhood		8.9%	10.2%	7.7%
Journal Square area/neighborhood	13.2%	10.7%	9.1%	10.4%
Bayonne	7.9%	8.9%	12.5%	10.4%
Bergen or Passaic County	7.9%			
Essex or Morris County	7.9%			
Monmouth, Middlesex, Union or Ocean County	10.5%			
New York counties – east of the Hudson River	10.5%	10.7%		
Other	7.9%			

- If respondents *(n=509)* were attending **cultural events** during weekends, then the following are the main destinations.

Destination	Work in Jersey City	Work outside Jersey City	Both Work and Live in Jersey City	All Market Segments
Jersey City Downtown, but not in Lafayette	13.4%	16.7%	16.0%	15.9%
New York counties – east of the Hudson River	19.5%	47.4%	31.1%	36.1%
Other	12.2%	7.9%	10.4%	9.6%
Other	7.9%			

- If respondents *(n=998)* were out **dining and entertaining** on weekends, then the following are the main destinations.

Destination	Work in Jersey City	Work outside Jersey City	Both Work and Live in Jersey City	All Market Segments
Jersey City Downtown, but not in Lafayette	19.3%	37.5%	26.9%	29.6%
Hoboken		8.5%		
Monmouth, Middlesex, Union or Ocean County	9.9%			
New York counties – east of the Hudson River	16.1%	20.1%	17.3%	18.1%
Other	9.4%		10.6%	8.4%

- If respondents *(n=560)* were attending **sports and recreation** events on weekends, then the following are the main locations of this activity.

Destination	Work in Jersey City	Work outside Jersey City	Both Work and Live in Jersey City	All Market Segments
Jersey City Downtown, but not in Lafayette	12.2%	33.3%	22.2%	24.6%
Jersey City Heights area/neighborhood			9.5%	
Hoboken		7.6%		
Bergen or Passaic County	13.3%			
New York counties – east of the Hudson River	20.4%	12.9%	9.5%	12.7%
Other			8.7%	7.7%

- If respondents *(n=477)* were **visiting religious institutions** during weekends, then the following are the top destinations visited.

Destination	Work in Jersey City	Work outside Jersey City	Both Work and Live in Jersey City	All Market Segments
Jersey City Bergen area/neighborhood			11.7%	9.9%
Jersey City Downtown, but not in Lafayette		24.4%	17.9%	18.0%
Jersey City Greenville area/neighborhood		12.2%	20.6%	14.3%
Journal Square area/neighborhood		11.6%		
Bayonne 8.5%	8.5%			
Essex or Morris County	13.4%			
Monmouth, Middlesex, Union or Ocean County	20.7%			
New York counties – east of the Hudson	8.5%			

- If respondents *(n=929)* spent time **visiting friends**, then the top destinations are the following.

Destination	Work in Jersey City	Work outside Jersey City	Both Work and Live in Jersey City	All Market Segments
Jersey City Downtown, but not in Lafayette	14.0%	18.4%	15.7%	16.5%
Jersey City Greenville area/neighborhood			10.5%	
Essex or Morris County	7.8%			
Monmouth, Middlesex, Union or Ocean County	10.1%			
New York counties – east of the Hudson River	14.0%	22.9%	13.0%	17.2%
Other	10.1%	6.1%	10.3%	8.5%

- If respondents *(n=890)* were doing **miscellaneous activities**, then the top destinations are the following.

Destination	Work in Jersey City	Work outside Jersey City	Both Work and Live in Jersey City	All Market Segments
Jersey City Downtown, but not in Lafayette	13.2%	43.4%	32.6%	33.7%
Jersey City Greenville area/neighborhood			9.9%	
Jersey City Heights area/neighborhood			8.2%	
Journal Square area/neighborhood		7.1%		
Monmouth, Middlesex, Union or Ocean County	13.8%			
New York counties – east of the Hudson River	14.%	6.6%		7.5%
Other			9.3%	7.0%

1. Non Work Trips by Mode - Weekday

Travel by mode during non work hours for weekdays is provided below in *"Table A: Weekday Non Work Travel by Mode."* Trips are provided for each of the three market segments. In summary, the highlights are the following.

- Fifty-five percent or more of non work trips to drop or pick someone up from a train station, work, or school/daycare is by car across all three market segments.
- Respondents make good use of car or PATH to attend school during non work hours. Respectively, by market segments 1, 2, and 3[26], the percent of people using cars is 32%, 24% and 36%; and the percent using PATH respectively is 27%, 19% and 14%.
- Respondents who live in Jersey City also make good use of walking or biking (19% and 11% respectively for people living in JC but working elsewhere; and people living and working in JC) to attend school.
- Respectively, 69% and 61% of people working in Jersey City (and living elsewhere) and living in Jersey City (and working elsewhere) use their car to get to a second job. A smaller percentage (48%) of respondents who live and work in Jersey City take their car to a second job.
- Most respondents drive their cars to go grocery shopping (61%; 54%; 68% respectively for market segments 1, 2 and 3).
- Approximately 50% or more of the respondents use some form of passenger vehicle to shop at retail establishments, cleaners and similar purposes for each market segment.
- Passenger vehicles are used at least 40% of the time to get to medical establishments; however visits to cultural sites are done via mass transit at least 45% of the time.
- Respondents seem to prefer their cars or carpooling when dining or entertaining out during the weekday (at least 40% in all markets); however respondents show a likely preference for mass transit as well (at least 30% in all market segments).
- High percentage of respondents (at least 40% in all market segments) favored their car or carpooling to attend sports and recreation activities or visit religious establishments during the weekday.
- Respondents use cars often (around 50%) to visit friends or conduct miscellaneous errands.

[26] Market Segment 1: Works in Jersey City (and lives outside Jersey City; Market Segment 2: Works outside Jersey City (but lives in Jersey City); Market Segment 3: Lives and Works in Jersey City.

Table A: Weekday Non Work Travel by Mode

Drop-off/Pick-up someone at work (or transit stop) *(n=285)*:	**Work in Jersey City**	**Live in Jersey City**	**Work and Live in Jersey City**	**Total**
Drive alone	36	83	78	197
Carpool	18	6	17	41
Dropped off/taxi	2	3	1	6
Bus	4	1	7	12
NJ Transit Train	2	0	2	4
PATH	3	3	5	11
Light Rail	2	1	0	3
Ferry	1	0	1	2
Multimode (ex: bus to PATH, bus to LRT, drive to Ferry)	1	1	1	3
Walk/Bike	0	2	4	6
Total	*69*	*100*	*116*	*285*
Drop-off/Pick-up someone at school/daycare *(n=319)*:	**Work in Jersey City**	**Live in Jersey City**	**Work and Live in Jersey City**	**Total**
Drive alone	54	49	79	182
Carpool	10	7	12	29
Dropped off/taxi	0	1	1	2
Jitney	1	2	0	3
Bus	7	5	13	25
PATH	3	3	2	8
Light Rail	3	3	8	14
Ferry	1	0	0	1
Multimode (ex: bus to PATH, bus to LRT, drive to Ferry)	3	4	3	10
Walk/Bike	3	25	17	45
Total	*85*	*99*	*135*	*319*
Attend school *(179)*:	**Work in Jersey City**	**Work in Jersey City**	**Work in Jersey City**	**Work in Jersey City**
Drive alone	12	13	32	57
Carpool	0	0	4	4
Dropped off/taxi	0	1	0	1
Bus	3	12	21	36
NJ Transit Train	1	2	2	5
PATH	10	10	12	32
Light Rail	3	1	5	9
Multimode (ex: bus to PATH, bus to LRT, drive to Ferry)	5	5	2	12
Walk/Bike	3	10	10	23
Total	*37*	*54*	*88*	*179*
Go to a second job *(n=148)* :	**Work in Jersey City**	**Live in Jersey City**	**Work and Live in Jersey City**	**Total**
Drive alone	27	14	41	82
Carpool	1	1	2	4
Vanpool	0	1	0	1

Dropped off/taxi	1	0	0	1
Jitney	0	0	1	1
Bus	0	4	15	19
NJ Transit Train	0	0	1	1
PATH	2	0	7	9
Light Rail	1	1	2	4
Ferry	0	1	0	1
Multimode (ex: bus to PATH, bus to LRT, drive to Ferry)	3	1	4	8
Walk/Bike	4	0	13	17
Total	*39*	*23*	*86*	*148*
Go grocery shopping *(n=1332)*:	**Work in Jersey City**	**Live in Jersey City**	**Work and Live in Jersey City**	**Total**
Drive alone	216	265	280	761
Carpool	16	32	39	87
Vanpool	0	2	0	2
Dropped off/taxi	2	5	10	17
Jitney	0	2	2	4
Bus	15	35	49	99
NJ Transit Train	2	2	1	5
PATH	13	14	11	38
Light Rail	20	21	18	59
Multimode (ex: bus to PATH, bus to LRT, drive to Ferry)	35	6	6	47
Walk/Bike	36	108	69	213
Total	*355*	*492*	*485*	*1,332*
Stop at retail store, cleaners, etc' *(n=1335)* :	**Work in Jersey City**	**Live in Jersey City**	**Work and Live in Jersey City**	**Total**
Drive alone	196	189	228	613
Carpool	19	28	21	68
Vanpool	1	1	1	3
Dropped off/taxi	1	4	1	6
Jitney	0	3	4	7
Bus	11	23	50	84
NJ Transit Train	2	1	3	6
PATH	21	30	17	68
Light Rail	49	19	34	102
Ferry	2	0	0	2
Multimode (ex: bus to PATH, bus to LRT, drive to Ferry)	43	15	10	68
Walk/Bike	63	138	97	298
Total	*408*	*451*	*466*	*1,325*
Medical visit *(n=250)*:	**Work in Jersey City**	**Live in Jersey City**	**Work and Live in Jersey City**	**Total**
Drive alone	37	33	50	120
Carpool	1	5	2	8
Vanpool	0	1	2	3
Dropped off/taxi	2	2	1	5
Jitney	0	0	2	2
Bus	3	16	15	34

NJ Transit Train	2	0	0	2
PATH	8	9	10	27
Light Rail	3	1	3	7
Ferry	4	0	1	5
Multimode (ex: bus to PATH, bus to LRT, drive to Ferry)	8	7	3	18
Walk/Bike	5	6	8	19
Total	*73*	*80*	*97*	*250*
Cultural events *(n=486)*:	**Work in Jersey City**	**Live in Jersey City**	**Work and Live in Jersey City**	**Total**
Drive alone	24	46	53	123
Carpool	8	13	29	50
Vanpool	0	0	1	1
Dropped off/taxi	4	6	2	12
Jitney	0	1	3	4
Bus	4	10	15	29
NJ Transit Train	3	2	1	6
PATH	17	61	44	122
Light Rail	8	4	5	17
Ferry	5	0	1	6
Multimode (ex: bus to PATH, bus to LRT, drive to Ferry)	26	25	21	72
Walk/Bike	5	21	18	44
Total	*104*	*189*	*193*	*486*
Dining and entertainment *(n=1309)* :	**Work in Jersey City**	**Live in Jersey City**	**Work and Live in Jersey City**	**Total**
Drive alone	145	105	149	399
Carpool	68	58	89	215
Vanpool	1	0	1	2
Dropped off/taxi	2	13	7	22
Jitney	1	1	4	6
Bus	12	18	26	56
NJ Transit Train	5	3	2	10
PATH	45	72	58	175
Light Rail	33	10	22	65
Ferry	8	0	0	8
Multimode (ex: bus to PATH, bus to LRT, drive to Ferry)	61	32	25	118
Walk/Bike	76	90	67	233
Total	*457*	*402*	*450*	*1,309*
Sports and recreation *(n=616)*:	**Work in Jersey City**	**Live in Jersey City**	**Work and Live in Jersey City**	**Total**
Drive alone	71	65	82	218
Carpool	17	18	32	67
Vanpool	1	0	2	3
Dropped off/taxi	2	3	1	6
Jitney	0	1	2	3
Bus	7	9	15	31
NJ Transit Train	4	1	4	9
PATH	17	30	20	67
Light Rail	12	4	6	22

Ferry	2	0	0	2
Multimode (ex: bus to PATH, bus to LRT, drive to Ferry)	23	13	10	46
Walk/Bike	15	65	62	142
Total	*171*	*209*	*236*	*616*
Visit religious institution *(n=409)* :	**Work in Jersey City**	**Live in Jersey City**	**Work and Live in Jersey City**	**Total**
Drive alone	35	49	79	163
Carpool	13	18	32	63
Vanpool	0	2	2	4
Dropped off/taxi	0	1	0	1
Jitney	0	0	2	2
Bus	5	9	21	35
NJ Transit Train	1	2	1	4
PATH	4	3	8	15
Light Rail	2	3	4	9
Multimode (ex: bus to PATH, bus to LRT, drive to Ferry)	6	5	7	18
Walk/Bike	17	49	29	95
Total	*83*	*141*	*185*	*409*
Visit friends *(n=1096)*:	**Work in Jersey City**	**Live in Jersey City**	**Work and Live in Jersey City**	**Total**
Drive alone	144	138	152	434
Carpool	18	30	47	95
Dropped off/taxi	3	9	4	16
Jitney	0	2	5	7
Bus	4	31	38	73
NJ Transit Train	5	3	4	12
PATH	37	68	48	153
Light Rail	12	8	17	37
Ferry	1	0	0	1
Multimode (ex: bus to PATH, bus to LRT, drive to Ferry)	46	32	24	102
Walk/Bike	22	83	61	166
Total	*292*	*404*	*400*	*1,096*
Miscellaneous errands/other *(n=1262)*:	**Work in Jersey City**	**Live in Jersey City**	**Work and Live in Jersey City**	**Total**
Drive alone	223	186	207	616
Carpool	17	27	34	78
Vanpool	2	0	1	3
Dropped off/taxi	2	4	2	8
Jitney	0	3	5	8
Bus	7	25	32	64
NJ Transit Train	4	2	0	6
PATH	31	40	26	97
Light Rail	32	11	17	60
Ferry	11	1	1	13
Multimode (ex: bus to PATH, bus to LRT, drive to Ferry)	53	28	29	110
Walk/Bike	56	86	57	199
Total	438	413	411	1,262

2. Non Work Trips by Mode – Weekends

Travel by mode during non work hours on weekends is provided below in *"Table B: Weekend Non Work Travel by Mode."* Trips are provided for each of the three market segments[27]. In summary, the highlights are the following.

- Respondents answering stated that driving alone or carpooling was their primary means of travel to conduct miscellaneous errands or visit friends during the weekend – approximately 50% or more across all there market segments.
- Many more respondents (approximately 74%) who only work in Jersey City use car alone or in a pool to get to a religious institution, get to a sports or recreation event or dine or entertain out, while roughly 40% (Market Segment 2) to 60% (Market Segment 3) of respondents who live here use some form of auto travel.
- Thirty-four percent to 58% of respondents living in Jersey City use a car to attend a cultural event, visit a medical establishment or do shop at retail locations, go to the cleaners on the weekend. Respondents who only work in Jersey City stated they use a car 60% to 70% to conduct these activities.
- Over sixty percent of reporting respondents said they use a car for grocery shopping on the weekends.
- Thirty-eight to 92% of reporting respondents said they use a car to get to a second job or drop/pick-up someone on the weekend from work, transit stop, school or day care. However, only a very small few[28] reported doing these activities on the weekend.

Table B: Weekend Non Work Travel by Mode

Miscellaneous errands/other *(n=890)*:	**Work in JC**	**Live in JC**	**Work and Live in JC**	**Total**
Drive alone	105	175	190	470
Carpool	12	34	34	80
Vanpool	1	0	0	1
Dropped off/taxi	1	2	1	4
Jitney	1	2	4	7
Bus	9	25	26	60
NJ Transit Train	2	0	0	2
PATH	5	37	15	57
Light Rail	9	9	14	32
Ferry	0	1	2	3
Multimode (ex: bus to PATH, bus to LRT, drive to Ferry)	4	16	18	38
Walk/Bike	10	77	49	136
Total	*159*	*378*	*353*	*890*

[27] [27] Market Segment 1: Works in Jersey City (and lives outside Jersey City; Market Segment 2: Works outside Jersey City (but lives in Jersey City); Market Segment 3: Lives and Works in Jersey City.
[28] Ex: the smallest number of respondents reporting was eight, the maximum was 60 across the three market segments.

Visit friends *(n=929)*:	**Work in JC**	**Live in JC**	**Work and Live in JC**	**Total**
Drive alone	96	136	144	376
Carpool	26	37	54	117
Vanpool	1	0	0	1
Dropped off/taxi	1	5	2	8
Jitney	0	2	3	5
Bus	10	22	32	64
NJ Transit Train	4	4	4	12
PATH	13	65	48	126
Light Rail	6	11	10	27
Ferry	0	1	0	1
Multimode (ex: bus to PATH, bus to LRT, drive to Ferry)	10	30	18	58
Walk/Bike	12	67	55	134
Total	*179*	*380*	*370*	*929*
Visit religious institution *(n=477)* :	**Work in JC**	**Live in JC**	**Work and Live in JC**	**Total**
Drive alone	50	47	88	185
Carpool	11	27	42	80
Vanpool	0	1	1	2
Dropped off/taxi	1	3	1	5
Jitney	1	0	2	3
Bus	7	18	23	48
NJ Transit Train	1	1	2	4
PATH	2	8	9	19
Light Rail	1	3	4	8
Multimode (ex: bus to PATH, bus to LRT, drive to Ferry)	2	2	10	14
Walk/Bike	6	62	41	109
Total	*82*	*172*	*223*	*477*
Sports and recreation *(n=560)*:	**Work in JC**	**Live in JC**	**Work and Live in JC**	**Total**
Drive alone	56	58	95	209
Carpool	14	28	39	81
Vanpool	0	0	2	2
Dropped off/taxi	3	3	2	8
Jitney	0	1	2	3
Bus	4	14	17	35
NJ Transit Train	2	2	2	6
PATH	3	27	22	52
Light Rail	6	5	7	18
Ferry	0	1	0	1
Multimode (ex: bus to PATH, bus to LRT, drive to Ferry)	6	5	11	22
Walk/Bike	4	66	53	123
Total	*98*	*210*	*252*	*560*
Dining and entertainment *(n=998)*:	**Work in JC**	**Live in JC**	**Work and Live in JC**	**Total**
Drive alone	88	111	142	341
Carpool	46	59	99	204

Vanpool	0	1	2	3
Dropped off/taxi	2	6	5	13
Jitney	0	1	5	6
Bus	10	15	29	54
NJ Transit Train	5	0	4	9
PATH	12	69	59	140
Light Rail	11	12	14	37
Ferry	0	1	0	1
Multimode (ex: bus to PATH, bus to LRT, drive to Ferry)	9	30	20	59
Walk/Bike	9	84	38	131
Total	*192*	*389*	*417*	*998*
Cultural events *(n=509)*:	**Work in JC**	**Live in JC**	**Work and Live in JC**	**Total**
Drive alone	36	51	61	148
Carpool	14	21	34	69
Vanpool	0	0	1	1
Dropped off/taxi	2	1	4	7
Jitney	0	0	2	2
Bus	4	14	17	35
NJ Transit Train	1	1	3	5
PATH	7	64	52	123
Light Rail	5	3	5	13
Ferry	0	1	1	2
Multimode (ex: bus to PATH, bus to LRT, drive to Ferry)	9	35	21	65
Walk/Bike	4	24	11	39
Total	*82*	*215*	*212*	*509*
Medical visit *(n=182):*	**Work in JC**	**Live in JC**	**Work and Live in JC**	**Total**
Drive alone	25	24	40	89
Carpool	2	3	9	14
Vanpool	0	0	1	1
Dropped off/taxi	3	1	3	7
Jitney	0	1	3	4
Bus	5	11	13	29
PATH	0	5	4	9
Light Rail	2	2	5	9
Multimode (ex: bus to PATH, bus to LRT, drive to Ferry)	1	3	4	8
Walk/Bike	0	6	6	12
Total	*38*	*56*	*88*	*182*
Stop at retail store, cleaners, etc' *(n=977)* :	**Work in JC**	**Live in JC**	**Work and Live in JC**	**Total**
Drive alone	106	164	185	455
Carpool	26	41	49	116
Vanpool	0	0	1	1
Dropped off/taxi	1	2	1	4
Jitney	0	5	3	8
Bus	11	20	46	77
NJ Transit Train	2	0	1	3
PATH	7	32	21	60

Light Rail	13	17	22	52
Ferry	0	1	0	1
Multimode (ex: bus to PATH, bus to LRT, drive to Ferry)	7	7	14	28
Walk/Bike	15	96	61	172
Total	*188*	*385*	*404*	*977*
Go grocery shopping *(n=1002)*:	**Work in JC**	**Live in JC**	**Work and Live in JC**	**Total**
Drive alone	101	218	222	541
Carpool	20	46	57	123
Vanpool	0	2	1	3
Dropped off/taxi	1	3	8	12
Jitney	1	2	1	4
Bus	14	28	36	78
NJ Transit Train	1	0	0	1
PATH	5	13	12	30
Light Rail	5	11	17	33
Multimode (ex: bus to PATH, bus to LRT, drive to Ferry)	4	6	10	20
Walk/Bike	14	92	51	157
Total	*166*	*421*	*415*	*1,002*
Go to a second job *(n=107)*:	**Work in JC**	**Live in JC**	**Work and Live in JC**	**Total**
Drive alone	16	10	34	60
Carpool	1	1	3	5
Dropped off/taxi	1	1	1	3
Jitney	1	0	2	3
Bus	1	3	6	10
NJ Transit Train	1	0	0	1
PATH	0	2	4	6
Light Rail	0	2	1	3
Multimode (ex: bus to PATH, bus to LRT, drive to Ferry)	2	1	2	5
Walk/Bike	2	2	7	11
Total	*25*	*22*	*60*	*107*
Attend school *(n=52)*:	**Work in JC**	**Live in JC**	**Work and Live in JC**	**Total**
Drive alone	4	7	9	20
Vanpool	1	1	1	3
Jitney	0	2	2	4
Bus	1	5	3	9
PATH	2	4	2	8
Light Rail	0	1	2	3
Multimode (ex: bus to PATH, bus to LRT, drive to Ferry)	0	1	1	2
Walk/Bike	0	0	3	3
Total	*8*	*21*	*23*	*52*
Drop-off/Pick-up someone at school/daycare *(n=59)*	**Work in JC**	**Live in JC**	**Work and Live in JC**	**Total**
Drive alone	11	8	16	35
Carpool	1	4	1	6

Vanpool	0	0	2	2
Bus	0	2	3	5
NJ Transit Train	0	1	0	1
PATH	0	1	0	1
Light Rail	1	0	0	1
Ferry	0	1	1	2
Walk/Bike	0	3	3	6
Total	*13*	*20*	*26*	*59*
Drop-off/Pick-up someone at work (or transit stop) *(n=116)*	**Work in JC**	**Live in JC**	**Work and Live in JC**	**Total**
Drive alone	9	37	27	73
Carpool	4	5	10	19
Dropped off/taxi	1	0	2	3
Bus	1	2	3	6
NJ Transit Train	1	1	1	3
PATH	0	1	3	4
Light Rail	1	0	2	3
Ferry	0	0	1	1
Multimode (ex: bus to PATH, bus to LRT, drive to Ferry)	0	1	2	3
Walk/Bike	0	1	0	1

Qualitative Research Summary

An online bulletin board qualitative study was designed and implemented in a four-day period: July 24, 2008 through July 28, 2008. The purpose of this study was to provide more-in-depth qualitative feedback from people who took the Jersey City 2050 Mobility Survey. This qualitative study sought feedback on five specific transportation themes that emerged from the extensive survey initiative and through various public sessions with community-wide stakeholder groups.

- Transit Integration
- Connected-Integrated Neighborhoods
- Regional Transportation Access to/from Jersey
- East-West Access between Hackensack River Waterfront and Hudson River Waterfront
- Regional and Local Movement of Goods

Two hundred and fifty mobility survey respondents were recruited, screened and selected to participate in this qualitative study. The goal was to obtain a maximum of 30 respondents regularly participating over the four-day period. The study ended with 28 participants.

The following include some key findings from this qualitative study.

Perceptions and Requirements for an Integrated Transit System

Participants had substantive thoughts and needs regarding the concept of an Integrated Transit System. The requirements revealed in the qualitative component of the mobility study helped shape the Jersey City Circulation Element planning goals and strategies[29]. Requirements include service integration, linked payment systems, one operator or one responsible operating organization, and affordable, reliable and responsive service to meet user needs.

> "*I suppose an "integrated transit system" is one that uses various forms of public transportation to link the whole city or region together. As an example, one would walk a few blocks to pick up a small bus or jitney which would take you to the light rail station, bus station or train station."*
>
> *"…The buses in Jersey City to me are a mess. I see that some lines are run by different companies and we need one company servicing the city not small lines that run horrible busses and out of date equipment and charging over 1.00 for ridership. So in my opinion, I believe that an integrated transportation system will work best using cards that link NJ and NYC with ridership privileges."*
>
> *"My idea of an "integrated transit system" is one that some what models the MTA in NYC, but one that's even better. Both buses and trains are run under one*

[29] Detail available on CD: Q34 Comments versus Planning Goals and Strategies.

system and where transportation is available throughout all parts of the city and extends and/or connects to other tri-state area transportation systems. In addition to a transportation system that is reliable and affordable for its commuters.

"For me, the greatest benefit of an integrated transit system would be the ability to buy just one ticket, or have just one monthly pass, that would get me on the light rail, PATH, ferry, and bus. I have experienced a system like this in Vancouver, CA."

"An "integrated transit system" allows people to easily make connections to get from point A to point B. For example, people can catch the ferry to the Paulus Hook terminal, and walk a few minutes to catch the PATH at Exchange Place. The PATH and MTA NYC Transit systems should partner more extensively, to provide one smooth travel experience for the customers. It is also important that public transportation runs often enough so that people can make connections easily and don't have to stand on very crowded trains."

"My idea of an integrated transit system would be for all similar methods (ie trains, rail systems) be connected. And/or have close connections to other type systems (ie buses). The current rail (Light rail and PATH) transit system is completely not integrated. The light rail does not connect with the PATH and it does not use the same payment systems (i.e. smartcard or Metrocard), nor does the PATH connect with the NYC MTA."

Reactions (rating scale: 1=lowest; 10=highest) to having an Integrated Transit System were highly positive.

"An Integrated Transit System would be an ideal solution to our transportation woes. It would make the system more manageable in terms of costs and reliability. We live in one of the busiest and most commercial regions of the country yet we have such a poor transportation system."

"Anything that helps people in JC avoid driving to work gets a 10 from me.
It really does make a difference to not have to constantly keep track of four different types of payment systems for light rail, bus, PATH, and ferry.
And then of course I would need another type of card for a fifth payment system for the NYC subway system."

"People are busy nowadays and should be able to manage a smooth commute to where they need to be. With the oil crises, the growing population, increased traffic bottlenecks, and increased pollution, people should feel more encouraged to take public transportation. For that to happen, the entire public system (PATH, MTA, LightRail, Bus, NJ Transit, NY Waterway, etc) should engage in integration discussions."

"My reaction is 10! - Better interconnectivity with other systems, more frequent schedule on weekends, more Path stations throughout JC. Anyone who lives on

the other side of the Mall or away form Grove St has a long tiring walk ahead of them just to access the Path trains."

Participants identified several benefits that would accrue from an Integrated Transit System including effective inter-agency communication, increased use of public transit, reduced costs, improved travel times, reduction in pollution and overall increase in the quality of life.

"It would encourage people to consider public transportation, allow all the different transportation boards to engage in discussions, allow for repair and "beautification" hubs/stations, and encourage others in the boroughs of NYC to seriously consider Jersey City as a great place to live/work/visit.

"Mostly it would save time and allow people to board buses and trains without bottlenecks. If people could use a card to board buses, for instance, we wouldn't have to wait while they stick their dollars in the machine, which takes forever."

"Such a system would bring make getting around much easier. In addition, the people who plan the routes, train schedules, etc. would all hopefully coordinate and speak to each other. At this point I'm not sure that there is much communication going on between the various bus lines/Path/Light Rail."

"If done right, it should result in less of a hassle from the ticket perspective as well as shorter commute times due to better scheduling. In addition, it would result in increased ridership which would ultimately reduce pollution, further reduce commute times, create jobs, and make JC a more attractive place to live and work."

Perceptions and Requirements for Connected-Integrated Neighborhoods

Online Bulletin Board participants also gave their opinions regarding the concept of Connected-Integrated Neighborhoods. Their feedback includes the following considerations.

- Quality and effective public transit service should be equally available in all Jersey City neighborhoods.
- Community leaders and citizens would have input on determining how to meet neighborhood needs.
- People could move seamlessly between neighborhoods.
- Economic development and attractive 'neighborhood personalities' could exist in each neighborhood.

"More service should be in neighborhoods that rely on the busses. Why doesn't NJ transit have all the bus routes in Jersey City? That is the reason why the neighborhoods get half served - when the small companies decide to sell or stop running busses then the people suffer and NJ transit is operating one or two lines in area(s) that are very, very overcrowded busses..."

"Transportation would be available to all neighborhoods in Jersey City. Where every neighborhood regard(less of) its social-economic circumstances would not be excluded

from having access to adequate transportation. In addition community leaders and citizens would be able to have a say in the needs of their neighborhood's transportation needs. In addition all neighborhoods in JC would be a part of a Centralized-Integrated transportation system.

"This concept means to me traveling to throughout JC with relative east via mass transit. But, aside from the mall, I don't know of anywhere I'd want to go. I think the fundamental issue in JC, at least in Ward E, is that there's a demographic that'd largely welcome a Hoboken-style business environment--restaurants, pubs, shops, but for whatever reason, there's no mandate. I'd love to see a Connected-Integrated system with somewhere to go for leisure, not only for commuting."

"If you make it easier to get around town, people can discover destinations in other neighborhoods. There may be restaurants or cultural groups around town that are suffering in obscurity but if people had better access to them, they might become popular."

"I think the LRT is a pretty good example of integration, because it hits most of the downtown JC neighborhoods, except for Hamilton Park. It should easy to get from one neighborhood to another. While each neighborhood has its own 'personality', we still want Downtown Jersey City to be one cohesive area. It shouldn't be a lot harder for people in certain neighborhoods to reach public transportation."

The concept of Integrated-Connected Neighborhoods would include the following attributes.

Your feedback has been translated into a possible design for "Integrated-Connected Neighborhoods" within Jersey City that contain the following features.

1. Reliable, frequent, safe and affordable transportation, specifically in the form of mass transportation, would be available to all neighborhoods in Jersey City.
2. All neighborhoods, regardless of social-economic circumstance, would have access to adequate transportation.
3. Community leaders and citizens would have a say in defining the transportation needs of their neighborhoods.
4. All neighborhoods would be connected to a Centralized, Integrated Transportation System within Jersey City.
5. The Centralized, Integrated Transportation System would serve all major activities including Route 440, Journal Square, Downtown, local neighborhood businesses, schools, libraries and hospitals.
6. The Centralized, Integrated Transportation System would connect physically to all major transportation services providing access to/from Jersey City including PATH, Hoboken Terminal and the Ferry.
7. Access to the Centralized, Integrated Transportation System within Jersey City would be accessible from each neighborhood via multiple methods – walk, bike, and shuttle services.
8. System is able to accommodate disabled people adequately.
9. Communicate the existing systems and the neighborhood inter-connectivity to the public.

10. All neighborhoods are “walkability" features that are safe, environmentally friendly, easy to navigate and include transit villages.

Perceptions and Requirements for Regional Transportation Access to/from Jersey

Participant’s ideas regarding regional accessibility were varied. Their requirements included a comprehensive bus, train, ferry and LRT system that provides safe, reliable and convenient transit access throughout New Jersey and parts of New York; a universal fare package that is simple and affordable; and provides airport access.

> *“A transportation system where people can commute via bus, train, ferry and LRT…”*
>
> *“Transportation to and from the airport!!!”*
>
> *“Ready access to Jersey City's major hubs--Pavonia, Journal Square, Exchange Place, Grove Street, and even the Hoboken train station.”*
>
> *“YES! Traveling to and from any of this area's airports is an embarrassment. Buses trains, monorails... with a population base as large as Hudson County how can there not be a direct link, at least to EWR? I usually take a taxi because I just can't be bothered with this mess.”*
>
> *“Regional transportation allows for easy access to places outside of Jersey City and the closer parts of Manhattan. This includes easy access to NJ Transit, LIRR and MetroNorth. Connections can be better in some areas.”*
>
> *“Public transportation in JC is very much aimed at the east (NYC) but once you try to travel elsewhere in New Jersey by public transportation, things become very complicated.”*
>
> *“It should be a major part of the Integrated Transit system we were discussing the other day. Perhaps direct linkage via express bus to the existing hubs (both Penn Stations, Hoboken's train station . . .) from the Centralized Neighborhood stations in the last question. Adding to the "regional" part of the question, trains that go south toward Atlantic City-Cape May.”*
>
> *“Strong multimodal linkages with the surrounding region, including northern NJ counties and communities as well as Manhattan and the rest of New York City. It would include strong linkages between modes as well as some form of fare integration, or at least, a joint fare card to make transit connections relatively seamless. It would include cooperation between all the various operators in the region.”*
>
> *“I think that means easy mass transit access to the surrounding towns and suburbs. The most important features should be convenience and speed. Currently it is a huge headache to take a NJ Transit train to the suburbs on a weekend, it easily takes twice as long as if I had driven there instead. It also costs twice as*

much once you throw in the PATH ride. and it's not actually in JC, I have to go to Hoboken or NYC. It would also be nice if it operated like the LIRR with express trains on nights and weekends (not just during rush hour) and the bar car was fantastic!"

"A transit system that would make it easier to access other parts of New Jersey. For example, other than the PATH train, there does not seem to be too many ways to get from Jersey City to Newark. One way for better access to Newark, I think, could be an expansion of the Light Rail. Newark already has its own Light Rail system, and I'm sure that it could be expanded in a way where it could link to the Light Rail in Jersey City. Additionally, if someone who doesn't drive wants to get to other parts of New Jersey, one either has to get to Newark, Hoboken, or even go into Manhattan and the Port Authority Bus terminal. So I think the transit system in Jersey City should expand to include transportation to other parts of the state."

"It should include fare cards that allow you to transfer seamlessly from one form of transportation to another (e.g. bus to light rail to PATH), bike lanes and rerouted bus systems -- the way things are now, if you want to go to, say, Secaucus, it's often easier to take a bus into Manhattan to do so. Same deal with North Bergen/Union City."

Overall reaction to the regional concept was high due to the many benefits that would accrue including the positive environmental and economic impacts perceived by participants.

"It is so vital for a city's growth and prosperity to have a Regional Transportation Access System. It would allow growth for areas that are run down and economically depressed. It would make the city more inviting, the quality life would definitely improve."

"I think it's a great idea. Look what it did for Hoboken. Hoboken is a model transit village. That's what JC needs to transform itself into."

'"This will reduce the amount of cars on the road, reduce the amount of congestion and pollution, and encourage more people to mobilize and take advantage of what JC & beyond have to offer. We also need to consider people who cannot drive a car for one reason or another. Improved regional transportation opens a lot of doors for them."

"More public transportation needs to be aimed to the west."

"Regional access that is comprehensive, ie reaches enough places to serve everyone well, is imperative. All it needs after that is to be enough cheaper than driving to gain ridership."

The specific features desired in this regional system should include the following.

1. Seamlessly integrates and makes use of existing regional systems – such as NJ Transit trains into Hoboken or New York, ferry services and PATH services.

2. Avoids bringing cars into Jersey City, but instead relies on bringing more people into/out of Jersey City by transit services.
3. Stops, where necessary, regional auto traffic at intercept points outside of Jersey City.
4. Integrates well with a local "Integrated Transit System" so that people who live and work in Jersey City can, as much as possible, use transit within Jersey City and traveling to/from Jersey City rather than auto travel.

Perceptions and Requirements for East-West Access between Hackensack River Waterfront and Hudson River Waterfront

Some participants believe the concept of an East-West access between the two waterfronts was highly desirable.

> *"Improved east-west access would be a great idea. How would it be achieved? Building a new bridge that doesn't open for boat traffic. Where would it be located? Changing existing bridges, what happens to the traffic until that's accomplished?*
>
> *"I'm assuming the easiest way to do this is expanding/improving upon the Light Rail system? If that's the case, I'd say it's an 8 or 9, this should happen & it's an excellent idea."*
>
> *"I live near the Hackensack River and it's very difficult to get downtown on public transportation. Making it easier to get back and forth would encourage development along the Hackensack River, which is sorely needed."*
>
> *"The Hackensack River borders JC to the west right? I'd think that people living in that area would appreciate better access so I'll rate it an 8."*
>
> *"Yes (a "9") for example access from the heights to Route 440 mall is really only convenient with a car. The light rail should extend westward via an overpass over 440 to the center of the mall and planned parks along the river."*
>
> *"It would be ideal if there was a east-west access between Hackensack River and Hudson river water fronts that would help in accessing other counties in NJ."*
>
> *"Adding more bus lines would be a quicker and cheaper (way) to help with the east-west connectivity."*
>
> *"For JC, the 6th Sreet. Embankment has been proposed and becoming a part of the Greenway, if it is preserved and used as a park. But I would be happy with bike lanes on the shopping streets, since I use my bike for utilitarian purposes usually, like commuting to work and shopping, a lot more than for recreational."*

Perceptions and Requirements for Regional and Local Movement of Goods

Reactions to movement of goods were diverse. Generally, participants do not like trucks into Jersey City but recognize that a better system is needed.

> *"Much of goods entering JC now are coming in from Trucks. Trucks on the streets in Jersey City is very dangerous and unsightly. It's very treacherous to share the roads with trucks. JC does not have the design to have trucks running along it's streets."*
>
> *"I don't have too much problems with the way things are now."*
>
> *"One thing I would like to add is that there appears to be no actual access route specifically for JC, all roads seem to lead to the Holland tunnel, but you can almost not make into the city without having to deal with some sort of tunnel traffic, so for people delivering to JC this is probably a huge issue."*
>
> *"How frustrating is it to sit in tunnel traffic when you have no intention of going into the tunnel? It makes no sense and our friends/family dread visiting. I don't blame them. If the tunnel is backed up close to an hour, they will sit in it for no reason just to get to our place. Same with delivery trucks: they're not going to the tunnel but they have to navigate that traffic in order to make it anywhere. That is one of the biggest Jersey City traffic issues & it needs to be addressed immediately."*
>
> *"I think the trucks around here are one of the scariest factors I face when driving, especially on narrow roads, like the Witt Penn bridge, so I would rate the current system of moving goods around JC a 5."*
>
> *"I live near a freight train track and do not mind it at all. They are some of the longest, slowest trains I have ever seen and my two-year-old loves looking at them. But the trucks on Communipaw are so obnoxious, and they should be using Garfield to get where they are going I think. But no-one enforces this."*
>
> *"When I think of the movement of goods through JC, I think of the 1/9, Tonnelle Ave circle by the U-Haul shop. What a god-aweful entrance into the waterfront. It's hideous. When I can, I drive through Hoboken just so I don't have to see it."*
>
> *"That Tonnelle Circle is a pattern I avoid at all costs - ugly, congested & DANGEROUS."*

Recommendations and Next Steps

Results obtained from the Jersey City 2050 Mobility Study are useable for the transportation planning purposes of this study. **The following are specific** recommend**ed uses a result of this study.**
Update transit versus non transit shares by market segment – data is more recent than the Census or other data available through transportation agencies in the region.

Rely on origin and destination patterns in the Circulation Element Plan – patterns are reasonably consistent with known data and are remarkably similar to patterns revealed more than a decade old during peer-reviewed planning efforts for the $1.3 billion dollar Hudson-Bergen Light Rail project.

Develop highway volumes using on O-D patterns from the survey and the North Jersey Transportation Planning Authority (NJTPA) trip tables – the NJTPA is the recognized transportation planning agency in New Jersey and has a model appropriate for this use.

Plan and develop specific transportation goals and improvement strategies targeted to each market segment – the vast quantitative and qualitative data obtained in this study identifies relevant, comprehensive, community-based needs that can be addressed through cooperative planning in the region and within Jersey City.

Collaborate with regional transportation providers such as New Jersey Transit and Port Authority of New York & New Jersey to identify and recommend transit-based capital improvement projects that specifically address needs and challenges identified by respondents – quantitatively and qualitatively.

Identify, develop and implement more directly the "unaddressed" needs such as those of senior citizens, disabled and geographic-based challenges based on respondent feedback obtained in this study.

Identify and provide funding to support development of survey data detailed enough for transportation modeling and specific engineering needs – the survey provides a great start, but study limitations may require more effort for these purposes, particularly in areas outside of Downtown Jersey City.

Limitations of this study are small samples obtained in some cases at the neighborhood level. Resource Systems Group, the peer review firm, also notes the sparseness of the data at the neighborhood level. Thus, care, through experienced-based knowledge, consistency with other quality information, and assessments of reasonableness is needed when using small samples at the neighborhood level before making sweeping generalizations for planning, modeling or engineering purposes. This knowledge, other information and assessments of reasonableness should be identified and transparent in application.

Finally, it is recommended that Jersey City work closely with New Jersey Transit to support and collaborate on the design of another study needed for the anticipated expansion of the Hudson-Bergen Light Rail in Jersey City. This next study should

extend the work started for this 2050 Mobility Survey and address, where needed, any gaps identified (i.e. small sample sizes).

Appendix A: Outreach and Significance

Outreach

A comprehensive and holistic outreach program was undertaken to provide as much access to the Jersey City 2050 Mobility Survey as possible to encourage public participation and avoid excluding any particular group. The specific elements of the outreach program are listed below.

- Councilman Sottolano announced survey at March 24 Council Caucus meeting which is broadcast on JC1.
- Mayor's Press Conference on Wednesday, April 2 (resulted in articles in The Jersey Journal on April 4 and The Star-Ledger on April 3).
- Display ads appeared in The Jersey Journal on April 3 and 8 and The Jersey City Reporter on April 6.
- Paper copy of survey available through Mayor's Action Bureau, drop box located at City Hall, computer stations set up at City Hall and Jersey City public libraries.
- Survey announced on homepage of City of Jersey City website, press release posted on City website and at project website (www.jerseycitymobility2050.com).
- Link to project website from websites for following organizations:
    - City of Jersey City
    - Hudson County
    - Hudson TMA
    - NJ Transit Home Page
    - Van Vorst Park Association
    - Central Avenue SID (www.jcheights.com)
    - Jersey City Redevelopment Agency
    - New Jersey Transit
- Survey announcement e-mailed by various City employers to employees at various organizations, including City of Jersey City, Hudson County, Liberty Health Care system, and Connell Foley (Jersey City office). Survey announcement included with Hudson County employee paychecks.
- Survey announcement e-mailed to attendees of past public meetings for Jersey City transportation studies.
- English flyer announcement mailed to all Jersey City community groups that are known by the City.
- Letter from Mayor mailed to 72 largest employers in Jersey City to ask for assistance with outreach to employees. During follow-up phone calls, employers asked to distribute flyer announcement to employees via work e-mail and/or post flyer announcements in common areas.
- English and Spanish flyer announcements mailed to all certified UEZ businesses in Jersey City.
- English and Spanish flyer announcements e-mailed to Joan Eccleston, employee in the City of Jersey City Department of Health and Human Services, for distribution to senior groups.

- English and Spanish flyer announcements e-mailed to Aida Sanchez, employee in the City of Jersey City Office of Emergency Management, for distribution to building managers.
- English flyer announcement e-mailed by Division of Community Development to all of its grant sub-recipients (including but not limited to American Red Cross, Let's Celebrate, Inc., Hudson Pride, Catholic Charities of the Archdiocese of Newark, Houses of Hope, Inc., Jersey City Episcopal CDC, Hudson County HIV/AIDS Planning Council, Horizon Blue Cross Blue Shield, Visiting Homemaker Services of Hudson County, MASSH).
- English and Spanish flyer announcements e-mailed to Jennifer Morrill, Press Secretary for Mayor Jerramiah Healy, for distribution to City Council members to distribute to constituents.
    - English and Spanish flyer announcements e-mailed to Maria Maio, Executive Director of the Jersey City Housing Authority, for posting in common areas at JCHA housing complexes.
    - Announcement made and flyer announcements distributed at April 8 Planning Board meeting.
    - Flyer announcements provided to Lefrak Organization for distribution to retail tenants and employees and residential building lobbies.
    - Flyer announcements distributed by Special Improvement Districts:
    - Central Avenue: link to website on CASID website, flyer announcement mailed to all businesses
    - Journal Square: ambassadors distributed the flyer announcement to commuters at PATH station and to business owners in SID, flyer announcement distributed to board members for circulation among employees
    - McGinley Square: flyer announcement distributed to 120 businesses in SID
- Flyer announcement distributed by Neighborhood Improvement District (NID) staff.
- Flyer announcements distributed at various lunch locations in the Exchange Place area.
- Follow-up display ad appeared in The Jersey Journal on April 24.
- Follow-up notices appearing in the NJN after Mayor’s Press Conference.
- Targeted field work by Eastland Systems Group consultant team:
    - Spoke at Jersey City Housing Authority Resident Advisory Board (which is comprised of representatives from each resident association in the JCHA system) meeting and walked board members through paper survey on April 17, followed by field visits to various public housing complexes.
    - Outreach in Marion, Bergen, Heights, Downtown, Journal Square, Lafayette and Greenville neighborhoods via distribution of flyers at regional and local libraries and onsite intercept surveys in and around libraries.
    - Outreach in retail areas along Route 440, Newark Avenue, Westside Avenue, Central Avenue, Pacific Avenue, Communipaw Avenue and Bergen Avenue through distribution of flyers at a various retailers and some banks and conducting onsite intercept surveys in and around these retailers and banks.

- Outreach among low income working and unemployed residents including senior citizens in Greenville, Downtown, Journal Square, Lafayette and Marion neighborhoods via distribution of flyers, survey questionnaires for distribution and collection at specific housing developments, and onsite intercept surveys.

- Mayor's office announced survey at numerous community meetings throughout the city.
- Private sector employer outreach by Jersey City Planning Division, Jersey City Economic Development Corporation, Hudson County Economic Development Corporation, Jersey City Workforce Investment Board, Hudson Transportation Management Association, Jersey City Special Improvement Districts, HEDC Director's Office and Jersey City Mayor's Office.

To support the outreach process the following locations were specifically identified to ensure survey access.

- Pavonia/Newport Mall
- Retail centers on Route 440
- Colleges and Universities
- Major/large transit terminals such as Journal Square and PATH stations
- Hospitals and schools
- Public Housing
- Major residential developments
- One-Stop Career Center locations
- Libraries
- City Hall and other City buildings
- Employers in each neighborhood

Sample Error

"The percentages obtained in a sample survey are estimates of what the distribution of responses would be if the entire population had been surveyed. "Sampling error" is a social science term that describes the probable difference between interviewing everyone in a given population and a sample drawn from that population"[30]. Thus, the 2000 Journey-To-Work census reported the Jersey City sample catchment area as 156,341 trips. While it is likely that this number of trips has not changed somewhat between 2000 and when this survey was taken, no other comparable data was available for use in this study. Thus, using this census trip catchment area, the overall sampling error associated with an overall sample of 2,804 is +/- 3.5 percent at a 95 percent confidence interval.

"It should be noted, however, that sampling error does not take into account other possible sources of error inherent in any study of public opinion, attitudes, interests, or behaviors, particularly when estimates are based on self-reports of "socially desirable…or

[30] Contributing Source: Central New Jersey Regional Social Capital Benchmark Survey, Edward J.; Bloustein School of Planning and Public Policy Rutgers, The State University of New Jersey

undesirable" behaviors[31]*"* for instance behavior and preferences regarding transportation or substantial changes to planning landscape (e.g. new service, increased development).

"Sampling error is inversely proportional to sample size; in other words, sampling error decreases as the effective sample size increases. A corollary consequence to the inverse proportional relationship between sample error and sample size is that sampling error increases as the effective sample size is reduced[32]*"*. Thus, this fact must be kept in mind when comparing the responses of different groups within the sample such as market segments or neighborhoods within each market segment. Other means of interpretation could be included in interpreting findings, such as current data from transportation planning and operating agencies, level of precision required in the data, uses of data, professional judgment, and historic practices used in previous survey and analysis for transportation needs in Jersey City (e.g. employee and resident surveys that led to major transportation infrastructure investments including Hudson-Bergen Light Rail, new bus service and park-n-rides). *"Note: While it is perfectly acceptable in survey research to report the overall margin of sampling error, it technically should be calculated based on bivariate responses to each separate question in the survey*[33]*"*. Further, these calculations must be performed on unweighted data.

Sample Weighting

"Ideally, a survey sample will have the same demographic characteristics as the population from which it was drawn. In practice, however, this is rarely the case and a statistical procedure known as "weighting" is commonly used to adjust samples for differences between the demographic portraits of the population and the sample[34]*"*. Using standard approaches accepted within the survey profession, Resource Systems Group, the survey's peer review firm, weighted these data to assure that the demographic parameters of the samples correspond, within a reasonable degree of statistical tolerance, to the demographic parameters of the relevant populations: Market Segments, Income, and Transit versus Non Transit. The source for the weights was the 2000 Journey-to-Work census data, which by all accounts, gives the most conservative perspective. Specifically, since the Journey-to-Work census data is based on year 2000 information and many structural shifts have occurred in Jersey City since then, the decision to conduct analysis on unweighted data has been approved by Jersey City as a reasonable approach for the 2050 Jersey City Mobility Study.

[31] Ibid.
[32] Ibid.
[33] Ibid.
[34] Ibid.

Appendix

Exhibit A
AM Volume Capacity Ratio Through Year 2050

Although the NJRTM-E provided a useful tool to examine the Actions in conjunction with proposed development, the model should not be used out of context. The NJRTM-E is based on the year 2000 traffic and transit data and does not capture the capacity of the local street grid in detail. The year 2000 did not account for the Hudson-Bergen Light Rail Transit system. Therefore, the transit ridership projections of the NJRTM-E for the year 2030 do not show significant ridership for the HBLR. As a result, the modeling identified areas of congestion that would likely have been eliminated if the HBLR were imported into the model. This was taken into account in reviewing the adequacy of the Action Plan. Additionally, the NJRTM-E includes the demographics of the year 2030 and the infrastructure improvements that in the NJTPA Transportation Improvement Projects (TIP) through the year 2012 and the Project Development Work Program (PDWP) through the year 2010, including major projects such as Portway and the rehabilitation of the Route 139 Viaduct. The street grid improvements in this plan are not included in the NJRTM-E. Therefore, the effects of the proposed improvements in the Action Plan were considered when evaluating congested areas identified by the NJRTM-E.

PROPOSED PROJECTS			
ID	NAME	ID	NAME
1	11th Street Viaduct Extension and Grade Separation of 14th Street	32	Marin Boulevard Extension
2	Academy Street Bus, Bike and Pedestrian Extension	33	Metro Plaza Future Grid
3	Bay Street Extension	34	Morgan Street Extension
4	Bayfront I	35	Morris Canal Greenway**
5	Bus Layover Facility	36	Morris Street ROW Pedestrian Extension
6	Canal Crossing	37	New Connection Between Pavonia-Newport HBLR and PATH Newport Station
7	Claremont RDP Future Street Grid	38	New Danforth Interlocking
8	Corbin Avenue Extension	39	New Jersey Turnpike Exit 14A Reconfiguration
9	Danforth Transit Village RDP Street Grid	40	New Private Street
10	Dey Street Extension	41	New Road to Support Potential Development on Burma Road
11	Downtown HBLR Circulator	42	New Southbound Side Platform at Pavonia- Newport Station
12	Future New Urbanist Street Grid	43	New Street to connect Woodward and Van Horne Streets
13	Garabrant Street Extension	44	New Urbanist Street Grid
14	Garfield Avenue Widening	45	Newport NE Quadrant
15	Grand/Jersey Redevelopment Plan	46	NJCU West Campus
16	HBLR Extension	47	Old Colony Shopping Center Future Grid
17	HBLR Extension to Secaucus Junction (Lautenberg Station)	48	Pedestrian Connector to HBLR
18	HBLR Wye Bypass	49	Pedestrian Passage along HBLR
19	Hoboken Terminal	50	Portway
20	Jersey Avenue Extension (south)	50A	Portway: New 1-9T Extension
21	Jersey Avenue HBLR Realignment	50B	Portway: Route 1-9T/St. Paul's Avenue Viaduct
22	Jersey Avenue Park Redevelopment Plan	50C	Portway: Wittpenn Bridge
23	Journal Square Redevelopment Plan*	50D	Portway: New Road under St. Pauls Avenue Viaduct
24	Kellogg Street Extension	51	Railroad ROW North of Journal Square
25	Lafayette Gardens Hope VI	52	Route 440/Route 1-9T Multiuse Urban Boulevard
26	Lafayette Walkway	53	Sip Avenue Connector
27	Lehigh Valley RR ROW Preservation	54	Sixth Street Embankment/East-West Connections
28	Liberty Harbor North	55	State Street Extension
29	Linden Avenue Realignment	56	Warren Street Extension
30	Maple Street - Bishop Street Connector	57	Water Street Redevelopment
31	Maple Street Extension		

* pending adoption by the City Council ** where feasible

T&M ASSOCIATES
11 Tindall Road
Middletown, NJ 07748-2792
Phone: 732-671-6400
Fax: 732-671-7365

0 450 900 1,800 Feet

AM Highway Load, 2050

Volume/Capacity Ratio

- 0.00 - 0.85 (no congestion)
- 0.86 - 1.70 (1 hour congestion)
- 1.71 - 2.55 (2 hours congestion)
- 2.56 and greater (3+ hours congestion)
- Proposed Project
- Conceptual Project

Hudson–Bergen Light Rail

- Existing Lines
- Proposed Lines
- Existing LRT Station
- Proposed LRT Station

PATH

- PATH Lines
- Existing PATH Stop
- Proposed PATH Stop

Passenger Rail Lines

- Bergen County Line
- Bergen Tunnel / Arches
- Boonton Line
- Hoboken Terminal
- Main Line
- Montclair Line
- Morristown Line
- Newark City Subway
- Northeast Corridor Line
- Rail Lines
- Spurs and Sidings
- Ferry Routes
- Pedestrian Bridge
- Interstate Route
- U.S. Route
- State Route
- Toll Route
- County Route
- Ramp
- Private Road
- Proposed Road
- Right of Way
- Open Water
- Municipal Boundary
- State of New York

NOTE: Please contact the Jersey City Division of Planning for specific information on mapped areas.

Prepared by: STK, April 20, 2009
Source: NJDEP - Municipal Boundary, Open Water; NYC Department of City Planning - New York City; NJDOT - 2008 Roads; NJTPA - Traffic Data;
File Path: H:\JCTY\00110\GIS\Projects\Final\jcty110_TrafficData_2050VC_AM_FINAL.mxd

Jersey City Circulation Element 2050
Exhibit A: Year 2050 AM Volume/Capacity Ratio
City of Jersey City
Hudson County, New Jersey

NOTE: This map was developed using New Jersey Department of Environmental Protection Geographic Information System digital data, but this secondary product has not been verified by NJDEP and is not State-authorized.

N

Appendix

Exhibit B
PM Volume Capacity Ratio Through Year 2050

Inset Map
Lyndhurst Township
Secaucus Town
North Bergen Township
Union City
Weehawken Township
Hoboken City
Kearny Town
Newark City
Bayonne City
Manhattan
Brooklyn
Lautenberg Station
Hoboken Terminal
See Inset Map
Hudson Bergen Light Rail
Passaic & Harmus Branch
Meadows Branch Number 2
Hudson Bergen Line
Northeast Corridor Line
Morris & Essex Line
Montclair Line
Morristown Line
Boonton Line
Pascack Valley Line
Bergen County Line
Port Jersey Boulevard
Audrey Zapp Drive
Caven Point Rd
Liberty State Park to World Financial Center
Liberty Park Water Taxi
Paulus Hook to World Financial Center
Exchange Place to World Financial Center
Jersey City (Harborside) to World Financial Center
Hoboken 14th Street to World Financial Center
Newport to World Financial Center
Weehawken to World Financial Center
Hoboken to Manhattan (Pier 11)
Weehawken to Manhattan (Pier 11)
Port Liberty to Manhattan (Pier 11)
Manhattan (Pier 4) to Ellis Island
Manhattan (Pier 4) to Liberty Island
Ellis Island to Liberty Island
Liberty State Park to Ellis Island
Liberty State Park to Liberty Island
Port Jersey Railway
Conrail Shared Assets Operations
Newark Subway
Hudson Bergen Light Rail
Passaic & Harmus Branch
Meadows Branch Number 2
Meadows Branch Number 1
US 1 TRUCK SECONDARY
US 1 SECONDARY
US 1 TRUCK
US 1 EXPRESS SECONDARY
US 1 EXPRESS
NJ TURNPIKE SECONDARY
NJ 139 SECONDARY
NJ 495 SECONDARY
NJ 3 SECONDARY
NJ 440 SECONDARY
NJ 440 TURNPIKE EXPRESS
NJ 440 TURNPIKE SECONDARY
NJ 440 SECONDARY
NJ 21 SECONDARY
NJ 21
NJ 7 SECONDARY
NJ 7
NJ 25 SECONDARY
NJ 25
NJ 27 SECONDARY
NJ 27
NJ 29 SECONDARY
NJ 29
NJ 31 SECONDARY
NJ 31
NJ 32 SECONDARY
NJ 32
NJ 35 SECONDARY
NJ 35
NJ 36 SECONDARY
NJ 36
NJ 37 SECONDARY
NJ 37
NJ 38 SECONDARY
NJ 38
NJ 39 SECONDARY
NJ 39
NJ 40 SECONDARY
NJ 40
NJ 42 SECONDARY
NJ 42
NJ 43 SECONDARY
NJ 43
NJ 44 SECONDARY
NJ 44
NJ 46 SECONDARY
NJ 46
NJ 47 SECONDARY
NJ 47
NJ 49 SECONDARY
NJ 49
NJ 50 SECONDARY
NJ 50
NJ 52 SECONDARY
NJ 52
NJ 53 SECONDARY
NJ 53
NJ 55 SECONDARY
NJ 55
NJ 57 SECONDARY
NJ 57
NJ 59 SECONDARY
NJ 59
NJ 61 SECONDARY
NJ 61
NJ 63 SECONDARY
NJ 63
NJ 65 SECONDARY
NJ 65
NJ 67 SECONDARY
NJ 67
NJ

Appendix

Exhibit C
Average Daily Traffic (ADT) Volumes

Although the NJRTM-E provided a useful tool to examine the Actions in conjunction with proposed development, the model should not be used out of context. The NJRTM-E is based on the year 2000 traffic and transit data and does not capture the capacity of the local street grid in detail. The year 2000 did not account for the Hudson-Bergen Light Rail Transit system. Therefore, the transit ridership projections of the NJRTM-E for the year 2030 do not show significant ridership for the HBLR. As a result, the modeling identified areas of congestion that would likely have been eliminated if the HBLR were imported into the model. This was taken into account in reviewing the adequacy of the Action Plan. Additionally, the NJRTM-E includes the demographics of the year 2030 and the infrastructure improvements that in the NJTPA Transportation Improvement Projects (TIP) through the year 2012 and the Project Development Work Program (PDWP) through the year 2010, including major projects such as Portway and the rehabilitation of the Route 139 Viaduct. The street grid improvements in this plan are not included in the NJRTM-E. Therefore, the effects of the proposed improvements in the Action Plan were considered when evaluating congested areas identified by the NJRTM-E.

PROPOSED PROJECTS

ID	NAME	ID	NAME
1	11th Street Viaduct Extension and Grade Separation of 14th Street	32	Marin Boulevard Extension
2	Academy Street Bus, Bike and Pedestrian Extension	33	Metro Plaza Future Grid
3	Bay Street Extension	34	Morgan Street Extension
4	Bayfront I	35	Morris Canal Greenway**
5	Bus Layover Facility	36	Morris Street ROW Pedestrian Extension
6	Canal Crossing	37	New Connection Between Pavonia-Newport HBLR and PATH Newport Station
7	Claremont RDP Future Street Grid	38	New Danforth Interlocking
8	Corbin Avenue Extension	39	New Jersey Turnpike Exit 14A Reconfiguration
9	Danforth Transit Village RDP Street Grid	40	New Private Street
10	Dey Street Extension	41	New Road to Support Potential Development on Burma Road
11	Downtown HBLR Circulator	42	New Southbound Side Platform at Pavonia- Newport Station
12	Future New Urbanist Street Grid	43	New Street to connect Woodward and Van Horne Streets
13	Garabrant Street Extension	44	New Urbanist Street Grid
14	Garfield Avenue Widening	45	Newport NE Quadrant
15	Grand/Jersey Redevelopment Plan	46	NJCU West Campus
16	HBLR Extension	47	Old Colony Shopping Center Future Grid
17	HBLR Extension to Secaucus Junction (Lautenberg Station)	48	Pedestrian Connector to HBLR
18	HBLR Wye Bypass	49	Pedestrian Passage along HBLR
19	Hoboken Terminal	50	Portway
20	Jersey Avenue Extension (south)	50A	Portway: New 1-9T Extension
21	Jersey Avenue HBLR Realignment	50B	Portway: Route 1-9T/St. Paul's Avenue Viaduct
22	Jersey Avenue Park Redevelopment Plan	50C	Portway: Wittpenn Bridge
23	Journal Square Redevelopment Plan*	50D	Portway: New Road under St. Pauls Avenue Viaduct
24	Kellogg Street Extension	51	Railroad ROW North of Journal Square
25	Lafayette Gardens Hope VI	52	Route 440/Route 1-9T Multiuse Urban Boulevard
26	Lafayette Walkway	53	Sip Avenue Connector
27	Lehigh Valley RR ROW Preservation	54	Sixth Street Embankment/East-West Connections
28	Liberty Harbor North	55	State Street Extension
29	Linden Avenue Realignment	56	Warren Street Extension
30	Maple Street - Bishop Street Connector	57	Water Street Redevelopment
31	Maple Street Extension		

* pending adoption by the City Council ** where feasible

T&M ASSOCIATES
11 Tindall Road
Middletown, NJ 07748-2792
Phone: 732-671-6400
Fax: 732-671-7365

0 450 900 1,800 Feet

JCTY2050 ADT Volumes
- 0 - 3000
- 3001 - 3500
- 3501 - 10,000
- 10,001 - 15,000
- 15,001 and greater
- Proposed Project
- Conceptual Project

Hudson–Bergen Light Rail
- Existing Lines
- Proposed Lines
- Existing LRT Station
- Proposed LRT Station

PATH
- PATH Lines
- Existing PATH Stop
- Proposed PATH Stop

Passenger Rail Lines
- Bergen County Line
- Bergen Tunnel / Arches
- Boonton Line
- Hoboken Terminal
- Main Line
- Montclair Line
- Morristown Line
- Newark City Subway
- Northeast Corridor Line
- Rail Lines
- Spurs and Sidings
- Ferry Routes
- Pedestrian Bridge
- Interstate Route
- U.S. Route
- State Route
- Toll Route
- County Route
- Ramp
- Private Road
- Proposed Road
- Right of Way
- Open Water
- Municipal Boundary
- State of New York

NOTE: Please contact the Jersey City Division of Planning for specific information on mapped areas.

Prepared by: STK, April 20, 2009
Source: NJDEP - Municipal Boundary, Open Water; NYC Department of City Planning - New York City; NJDOT - 2008 Roads; NJTPA - Traffic Data;
File Path: H:\JCTY\00110\GIS\Projects\Final\jcty110_TrafficData_2050ADTVolumeFINAL.mxd

Jersey City Circulation Element 2050
Exhibit C: Year 2050 Average Daily Traffic (ADT) Volumes
City of Jersey City
Hudson County, New Jersey

NOTE: This map was developed using New Jersey Department of Environmental Protection Geographic Information System digital data, but this secondary product has not been verified by NJDEP and is not State-authorized.

N

Appendix

Jersey City Classification System
Major Collector

Jersey City Classification System
Major Collector

NJDOT Name	Local Name	Functional Classification
12TH ST	12TH ST	Major Collector
14TH ST	14TH ST	Major Collector
18TH ST	18TH ST	Major Collector
18TH ST	18TH ST	Major Collector
BAYVIEW AVE	BAYVIEW AVE	Major Collector
BAYVIEW AVE	BAYVIEW AVE	Major Collector
BAYVIEW AVE SECONDARY	BAYVIEW AVE SECONDARY	Major Collector
BAYVIEW AVE	BURMA RD	Major Collector
C COLUMBUS DR	C COLUMBUS DR	Major Collector
	CENTER ST	Major Collector
	CENTER ST	Major Collector
COLUMBUS DR	COLUMBUS DR	Major Collector
HUDSON COUNTY 612	COMMUNIPAW AVE (CR 612)	Major Collector
HUDSON COUNTY 653	COUNTY RD (CR 653)	Major Collector
HUDSON COUNTY 602	DANFORTH AVE (CR 602)	Major Collector
GLENWOOD AVE	GLENWOOD AVE	Major Collector
GRAND ST	GRAND ST	Major Collector
HUDSON COUNTY 622	GRAND ST (CR 622)	Major Collector
HUDSON COUNTY 622	GRAND ST (CR 622)	Major Collector
GREENE ST	GREENE ST	Major Collector
GREENE ST	GREENE ST	Major Collector
GREENE ST	GREENE ST	Major Collector
GRIFFITH ST	GRIFFITH ST	Major Collector
GROVE ST	GROVE ST	Major Collector
JERSEY AVE	JERSEY AVE	Major Collector
HUDSON COUNTY 631	JERSEY AVE (CR 631)	Major Collector
HUDSON COUNTY 631	JERSEY AVE (CR 631)	Major Collector
	JERSEY CITY BLVD	Major Collector
FR CO 501 TO X102320	KENNEDY BLVD	Major Collector
ROUTE 501	KENNEDY BLVD	Major Collector
FR CO 501 to US 1 NB	KENNEDY BLVD	Major Collector
ROUTE 501	KENNEDY BLVD	Major Collector
HUDSON COUNTY 637	MARIN BLVD (CR 637)	Major Collector
MERSELES ST	MERSELES ST	Major Collector

NJDOT Name	Local Name	Functional Classification
	MERSELES ST	Major Collector
C COLUMBUS DR	MERSELES ST	Major Collector
HUDSON COUNTY 728 I	MERSELES ST (CR 728 I)	Major Collector
HUDSON COUNTY 728 II	MERSELES ST (CR 728 II)	Major Collector
MERSELES ST	MERSELES ST (CR 728 II)	Major Collector
MONTGOMERY ST	MONTGOMERY ST	Major Collector
HUDSON COUNTY 624	MONTGOMERY ST (CR 624)	Major Collector
HUDSON COUNTY 624 SECONDARY	MONTGOMERY ST (CR 624) SECONDARY	Major Collector
NJ 139 UPPER	NJ 139 UPPER	Major Collector
NJ 139 UPPER SECONDARY	NJ 139 UPPER SECONDARY	Major Collector
WASHINGTON BLVD	WASHINGTON BLVD	Major Collector
HUDSON COUNTY 627	WASHINGTON ST	Major Collector
WILSON ST	WILSON ST	Major Collector

Appendix

Jersey City Classification System
Minor Collector

Jersey City Classification System
Minor Collector

NJDOT Name	Local Name	Functional Classification
18TH ST	18TH ST	Minor Collector
AMITY ST	AMITY ST	Minor Collector
AVENUE C	AVENUE C	Minor Collector
BERGEN AVE	BERGEN AVE	Minor Collector
HUDSON COUNTY 607	BERGEN AVE (CR 607)	Minor Collector
HUDSON COUNTY 625	BERGEN AVE (CR 625)	Minor Collector
BROADWAY	BROADWAY	Minor Collector
BROADWAY	BROADWAY	Minor Collector
HUDSON COUNTY 642	BROADWAY (CR 642)	Minor Collector
BAYVIEW AVE	BURMA RD	Minor Collector
CAVEN POINT AVE	CAVEN POINT AVE	Minor Collector
CAVEN POINT AVE	CAVEN POINT AVE	Minor Collector
CAVEN POINT RD	CAVEN POINT RD	Minor Collector
CENTRAL AVE	CENTRAL AVE	Minor Collector
CENTRAL AVE	CENTRAL AVE	Minor Collector
HUDSON COUNTY 663	CENTRAL AVE (CR 663)	Minor Collector
HUDSON COUNTY 663	CENTRAL AVE (CR 663)	Minor Collector
CHAPEL AVE	CHAPEL AVE	Minor Collector
CHAPEL AVE	CHAPEL AVE	Minor Collector
CLAREMONT AVE	CLAREMONT AVE	Minor Collector
CLAREMONT AVE	CLAREMONT AVE	Minor Collector
CLAREMONT AVE	CLAREMONT AVE	Minor Collector
HUDSON COUNTY 608	CLAREMONT AVE (CR 608)	Minor Collector
COLONY RD	COLONY RD	Minor Collector
HUDSON COUNTY 612	COMMUNIPAW AVE (CR 612)	Minor Collector
CONGRESS ST	CONGRESS ST	Minor Collector
CONGRESS ST	CONGRESS ST	Minor Collector
HUDSON COUNTY 664	CONGRESS ST (CR 664)	Minor Collector
HUDSON COUNTY 643	DUFFIELD AVE (CR 643)	Minor Collector
EDWARD HART DR	EDWARD HART DR	Minor Collector
FAIRMOUNT AVE	FAIRMOUNT AVE	Minor Collector
FRANKLIN ST	FRANKLIN ST	Minor Collector
BROADWAY	GARFIELD AVE	Minor Collector
GRAND ST	GRAND ST	Minor Collector
HUDSON COUNTY 622	GRAND ST (CR 622)	Minor Collector

NJDOT Name	Local Name	Functional Classification
GREENE ST	GREENE ST	Minor Collector
GREENE ST	GREENE ST	Minor Collector
HUDSON COUNTY 635	GROVE ST (CR 635)	Minor Collector
NEWARK ST	HOBOKEN AVE	Minor Collector
HOBOKEN AVE	HOBOKEN AVE	Minor Collector
HUDSON COUNTY 644	HOBOKEN AVE (CR 644)	Minor Collector
HUDSON COUNTY 644	HOBOKEN AVE (CR 644)	Minor Collector
HOWELL ST	HOWELL ST	Minor Collector
INDUSTRIAL DR	INDUSTRIAL DR	Minor Collector
JAMES AVE	JAMES AVE	Minor Collector
JERSEY AVE	JERSEY AVE	Minor Collector
HUDSON COUNTY 631	JERSEY AVE (CR 631)	Minor Collector
HUDSON COUNTY 614	JOHNSTON AVE (CR 614)	Minor Collector
LINDEN AVE	LINDEN AVE	Minor Collector
HUDSON COUNTY 635	MANILA AVE (CR 635)	Minor Collector
HUDSON COUNTY 609	MARTIN LUTHER KING JR DR (CR 609)	Minor Collector
HUDSON COUNTY 707	MERITT ST (CR 707)	Minor Collector
MONTGOMERY ST	MONTGOMERY ST	Minor Collector
MONTICELLO AVE	MONTICELLO AVE	Minor Collector
MONTICELLO AVE	MONTICELLO AVE	Minor Collector
HUDSON COUNTY 615	MONTICELLO AVE (CR 615)	Minor Collector
MORRIS PESIN RD	MORRIS PESIN RD	Minor Collector
HUDSON COUNTY 671	NEW YORK AVE (CR 671)	Minor Collector
NEWARK AVE	NEWARK AVE	Minor Collector
	NEWARK AVE	Minor Collector
HUDSON COUNTY 639	NEWARK AVE (CR 639)	Minor Collector
HUDSON COUNTY 644	NEWARK AVE (CR 644)	Minor Collector
OCEAN AVE	OCEAN AVE	Minor Collector
HUDSON COUNTY 601	OLD BERGEN RD (CR 601)	Minor Collector
CAVEN POINT AVE	PACIFIC AVE	Minor Collector
HUDSON COUNTY 621	PACIFIC AVE (CR 621)	Minor Collector
HUDSON COUNTY 621	PACIFIC AVE (CR 621)	Minor Collector
PALISADE AVE	PALISADE AVE	Minor Collector
HUDSON COUNTY 681	PATERSON PLANK RD (CR 681)	Minor Collector
PAVONIA AVE	PAVONIA AVE	Minor Collector
BAYVIEW AVE	PHILLIP DR	Minor Collector
PORT JERSEY BOULEVARD	PORT JERSEY BOULEVARD	Minor Collector
SIP AVE	SIP AVE	Minor Collector

NJDOT Name	Local Name	Functional Classification
HUDSON COUNTY 625	SIP AVE (CR 625)	Minor Collector
HUDSON COUNTY 646	ST PAULS AVE (CR 646)	Minor Collector
SUMMIT AVE	SUMMIT AVE	Minor Collector
SUMMIT AVE	SUMMIT AVE	Minor Collector
HUDSON COUNTY 617	SUMMIT AVE (CR 617)	Minor Collector
HUDSON COUNTY 617	SUMMIT AVE (CR 617)	Minor Collector
THOMAS CONRAD DR	THOMAS CONRAD DR	Minor Collector
THOMAS GANGEMI DR	THOMAS GANGEMI DR	Minor Collector
THOMAS MCGOVERN DR	THOMAS MCGOVERN DR	Minor Collector
TONNELLE AVE	TONNELE AVE	Minor Collector
TONNELE AVE	TONNELE AVE	Minor Collector
HUDSON COUNTY 643	VAN KEUREN AVE (CR 643)	Minor Collector
HUDSON COUNTY 627	WASHINGTON ST (CR 627)	Minor Collector
WEST SIDE AVE	WEST SIDE AVE	Minor Collector
HUDSON COUNTY 605	WEST SIDE AVE (CR 605)	Minor Collector
HUDSON COUNTY 641	WEST SIDE AVE (CR 641)	Minor Collector

Appendix

Jersey City Classification System
Local Residential Streets

Jersey City Classification System
Local Residential Streets

NJDOT Name	LOCAL Name	Functional Class
10TH ST	10TH ST	Local Residential Street
10TH ST	10TH ST	Local Residential Street
10TH ST	10TH ST	Local Residential Street
13TH ST	13TH ST	Local Residential Street
15TH ST	15TH ST	Local Residential Street
15TH ST	15TH ST	Local Residential Street
16TH ST	16TH ST	Local Residential Street
16TH ST	16TH ST	Local Residential Street
17TH ST	17TH ST	Local Residential Street
2ND ST	2ND ST	Local Residential Street
3RD ST	3RD ST	Local Residential Street
4TH ST	4TH ST	Local Residential Street
HUDSON COUNTY 678	5TH ST (CR 678)	Local Residential Street
6TH ST	6TH ST	Local Residential Street
6TH ST	6TH ST	Local Residential Street
8TH ST	8TH ST	Local Residential Street
8TH ST	8TH ST	Local Residential Street
HUDSON COUNTY 630	8TH ST (CR 630)	Local Residential Street
HUDSON COUNTY 630	8TH ST (CR 630)	Local Residential Street
9TH ST	9TH ST	Local Residential Street
HUDSON COUNTY 634	9TH ST (CR 634)	Local Residential Street
HUDSON COUNTY 634	9TH ST (CR 634)	Local Residential Street
ABBETT ST	ABBETT ST	Local Residential Street
ACADEMY ST	ACADEMY ST	Local Residential Street
ACADEMY STREET	ACADEMY ST	Local Residential Street
ACADEMY ST	ACADEMY ST	Local Residential Street
JERSEY AVE	AETNA ST	Local Residential Street
ALAN TER	ALAN TER	Local Residential Street
ALBERT PL	ALBERT PL	Local Residential Street
	ALDER ST	Local Residential Street
	ANDERSON CT	Local Residential Street
APOLLO CT	APOLLO CT	Local Residential Street
ARLINGTON AVE	ARLINGTON AVE	Local Residential Street
HUDSON COUNTY 613	ARLINGTON AVE (CR 613)	Local Residential Street
ARMSTRONG AVE	ARMSTRONG AVE	Local Residential Street

NJDOT Name	LOCAL Name	Functional Class
ARMSTRONG AVE	ARMSTRONG AVE	Local Residential Street
CARBON ST	ASH ST	Local Residential Street
ASTOR PL	ASTOR PL	Local Residential Street
ATLANTIC ST	ATLANTIC ST	Local Residential Street
	ATLAS CT	Local Residential Street
AUDUBON AVE	AUDUBON AVE	Local Residential Street
AUDUBON AVE	AUDUBON AVE	Local Residential Street
	AURORA PL	Local Residential Street
AVE E	AVE E	Local Residential Street
BALDWIN AVE	BALDWIN AVE	Local Residential Street
BARBARA PL	BARBARA PL	Local Residential Street
	BARNUM ST	Local Residential Street
BARROW ST	BARROW ST	Local Residential Street
BARROW ST	BARROW ST	Local Residential Street
BARTHOLDI AVE	BARTHOLDI AVE	Local Residential Street
BATES ST	BATES ST	Local Residential Street
BAY ST	BAY ST	Local Residential Street
BAY ST	BAY ST	Local Residential Street
BAYSIDE PL	BAYSIDE PL	Local Residential Street
BAYSIDE TER	BAYSIDE TER	Local Residential Street
BEACH ST	BEACH ST	Local Residential Street
BEACON AVE	BEACON AVE	Local Residential Street
BELMONT AVE	BELMONT AVE	Local Residential Street
BELMONT AVE	BELMONT AVE	Local Residential Street
BELVIDERE AVE	BELVIDERE AVE	Local Residential Street
BELVIDERE AVE	BELVIDERE AVE	Local Residential Street
BELVIDERE AVE	BELVIDERE AVE	Local Residential Street
BENNETT ST	BENNETT ST	Local Residential Street
BENNETT ST	BENNETT ST	Local Residential Street
BENNETT ST	BENNETT ST	Local Residential Street
BENTLEY AVE	BENTLEY AVE	Local Residential Street
BERKELEY ST	BERKELEY ST	Local Residential Street
BERNIUS CT	BERNIUS CT	Local Residential Street
BEVAN ST	BEVAN ST	Local Residential Street
BIDWELL AVE	BIDWELL AVE	Local Residential Street
	BIRCH ST	Local Residential Street
BISHOP AVE	BISHOP AVE	Local Residential Street
	BISHOP ST	Local Residential Street
BLEECKER ST	BLEECKER ST	Local Residential Street

NJDOT Name	LOCAL Name	Functional Class
BLEECKER ST	BLEECKER ST	Local Residential Street
BOLAND ST	BOLAND ST	Local Residential Street
BOLTWOOD ST	BOLTWOOD ST	Local Residential Street
BOND ST	BOND ST	Local Residential Street
BOOKER DR	BOOKER DR	Local Residential Street
CUNEO PL	BOORAEM AVE	Local Residential Street
HUDSON COUNTY 658	BOORAEM AVE (CR 658)	Local Residential Street
BOSTWICK AVE	BOSTWICK AVE	Local Residential Street
BOWERS ST	BOWERS ST	Local Residential Street
BOWERS ST	BOWERS ST	Local Residential Street
BOWERS ST	BOWERS ST	Local Residential Street
BOYD AVE	BOYD AVE	Local Residential Street
BOYD AVE	BOYD AVE	Local Residential Street
BOYD TER	BOYD TER	Local Residential Street
BRAMHALL AVE	BRAMHALL AVE	Local Residential Street
BRAMHALL AVE	BRAMHALL AVE	Local Residential Street
BRIARWOOD RD	BRIARWOOD RD	Local Residential Street
BRIGHT ST	BRIGHT ST	Local Residential Street
HUDSON COUNTY 619	BRIGHT ST (CR 619)	Local Residential Street
HUDSON COUNTY 620	BRIGHT ST (CR 620)	Local Residential Street
HUDSON COUNTY 620	BRIGHT ST (CR 620)	Local Residential Street
BRINKERHOFF ST	BRINKERHOFF ST	Local Residential Street
BRINKERHOFF ST	BRINKERHOFF ST	Local Residential Street
BRITTON AVE	BRITTON AVE	Local Residential Street
BROADMAN PKWY	BROADMAN PKWY	Local Residential Street
BROOK ST	BROOK ST	Local Residential Street
BROOKS PL	BROOKS PL	Local Residential Street
BROTHER STAN DR	BROTHER STAN DR	Local Residential Street
BROTHER STAN DR	BROTHER STAN DR	Local Residential Street
BROWN ST	BROWN ST	Local Residential Street
HUDSON COUNTY 629	BRUNSWICK ST (CR 629)	Local Residential Street
BRYAN PL	BRYAN PL	Local Residential Street
BRYANT AVE	BRYANT AVE	Local Residential Street
HUDSON COUNTY 665	CAMBRIDGE AVE (CR 665)	Local Residential Street
CANAL ST	CANAL ST	Local Residential Street
CARBON PL	CARBON PL	Local Residential Street
CARBON ST	CARBON ST	Local Residential Street

NJDOT Name	LOCAL Name	Functional Class
CARBON ST	CARBON ST	Local Residential Street
CARLTON AVE	CARLTON AVE	Local Residential Street
CARLTON AVE	CARLTON AVE	Local Residential Street
HUDSON COUNTY 718	CARLTON AVE (CR 718)	Local Residential Street
	CARPENTER CT	Local Residential Street
	CARPENTER CT	Local Residential Street
CARTERET AVE	CARTERET AVE	Local Residential Street
CARTERET AVE	CARTERET AVE	Local Residential Street
CARTERET AVE	CARTERET AVE	Local Residential Street
CASPER CT	CASPER CT	Local Residential Street
	CEDAR ST	Local Residential Street
CHAPEL AVE	CHAPEL AVE	Local Residential Street
CHAPEL AVE	CHAPEL AVE	Local Residential Street
CHARLES ST	CHARLES ST	Local Residential Street
HUDSON COUNTY 645	CHARLOTTE AVE (CR 645)	Local Residential Street
	CHERRY ST	Local Residential Street
CHESTNUT AVE	CHESTNUT AVE	Local Residential Street
CHOPIN CT	CHOPIN CT	Local Residential Street
CHOPIN CT	CHOPIN CT	Local Residential Street
CLARKE AVE	CLARKE AVE	Local Residential Street
CLENDENNY AVE	CLENDENNY AVE	Local Residential Street
CLERK ST	CLERK ST	Local Residential Street
CLIFF ST	CLIFF ST	Local Residential Street
CLIFTON PL	CLIFTON PL	Local Residential Street
CLINTON AVE	CLINTON AVE	Local Residential Street
COLDEN ST	COLDEN ST	Local Residential Street
COLDEN ST	COLDEN ST	Local Residential Street
COLES ST	COLES ST	Local Residential Street
COLES ST	COLES ST	Local Residential Street
COLGATE ST	COLGATE ST	Local Residential Street
HUDSON COUNTY 727	COLGATE ST (CR 727)	Local Residential Street
COLLARD ST	COLLARD ST	Local Residential Street
COLLARD ST	COLLARD ST	Local Residential Street
COLLARD ST	COLLARD ST	Local Residential Street
COLLARD ST	COLLARD ST	Local Residential Street
COLLEGE DR	COLLEGE DR	Local Residential Street
COLLEGE ST	COLLEGE ST	Local Residential Street

NJDOT Name	LOCAL Name	Functional Class
COLUMBIA AVE	COLUMBIA AVE	Local Residential Street
	COLUMBIA PL	Local Residential Street
CONCORD AVE	CONCORD AVE	Local Residential Street
CONDICT ST	CONDICT ST	Local Residential Street
	CONSTELLATION PL	Local Residential Street
	CONSTITUTION WAY	Local Residential Street
COOK ST	COOK ST	Local Residential Street
CORBIN AVE	CORBIN AVE	Local Residential Street
CORCORAN PL	CORCORAN PL	Local Residential Street
CORNELISON AVE	CORNELISON AVE	Local Residential Street
HUDSON COUNTY 619	CORNELISON AVE (CR 619)	Local Residential Street
COTTAGE ST	COTTAGE ST	Local Residential Street
	COTTONWOOD ST	Local Residential Street
COUNTRY VILLAGE RD	COUNTRY VILLAGE RD	Local Residential Street
COURT HOUSE PL	COURT HOUSE PL	Local Residential Street
COURT HOUSE PL	COURT HOUSE PL	Local Residential Street
COVERT ST	COVERT ST	Local Residential Street
	CRABAPPLE CT	Local Residential Street
CRAWFORD ST	CRAWFORD ST	Local Residential Street
CRESCENT AVE	CRESCENT AVE	Local Residential Street
CRESCENT AVE	CRESCENT AVE	Local Residential Street
CROSSGATE RD	CROSSGATE RD	Local Residential Street
CUBBERLY PL	CUBBERLY PL	Local Residential Street
CULVER AVE	CULVER AVE	Local Residential Street
CULVER AVE	CULVER AVE	Local Residential Street
CUSTER AVE	CUSTER AVE	Local Residential Street
HUDSON COUNTY 708	CUSTER AVE (CR 708)	Local Residential Street
	CYPRESS ST	Local Residential Street
DALES AVE	DALES AVE	Local Residential Street
HUDSON COUNTY 602	DANFORTH AVE (CR 602)	Local Residential Street
DE KALB AVE	DE KALB AVE	Local Residential Street
DE KALB AVE	DE KALB AVE	Local Residential Street
DELAWARE AVE	DELAWARE AVE	Local Residential Street
DELAWARE AVE	DELAWARE AVE	Local Residential Street
DELL AVE	DELL AVE	Local Residential Street
DELMAR RD	DELMAR RD	Local Residential Street
	DEMPSEY CT	Local Residential Street

NJDOT Name	LOCAL Name	Functional Class
DEY ST	DEY ST	Local Residential Street
DEY ST	DEY ST	Local Residential Street
DICK ST	DICK ST	Local Residential Street
DIVISION ST	DIVISION ST	Local Residential Street
	DOGWOOD ST	Local Residential Street
FR CO 602 to SOCIETY HILL APTS	DROYER ST	Local Residential Street
	DROYERS POIINTE BLVD E	Local Residential Street
	DROYERS POIINTE BLVD W	Local Residential Street
HUDSON COUNTY 724	DUDLEY ST (CR 724)	Local Residential Street
DUNCAN AVE	DUNCAN AVE	Local Residential Street
DUNCAN AVE	DUNCAN AVE	Local Residential Street
HUDSON COUNTY 605	DUNCAN AVE (CR 605)	Local Residential Street
HUDSON COUNTY 607	DUNCAN AVE (CR 607)	Local Residential Street
DUNCAN CT	DUNCAN CT	Local Residential Street
DWIGHT ST	DWIGHT ST	Local Residential Street
DWIGHT ST	DWIGHT ST	Local Residential Street
DWIGHT ST	DWIGHT ST	Local Residential Street
HUDSON COUNTY 706	E 53RD ST (CR 706)	Local Residential Street
HUDSON COUNTY 706	E 53RD ST (CR 706)	Local Residential Street
	E ROBINSON DR	Local Residential Street
EAST ST	EAST ST	Local Residential Street
EASTERN PKWY	EASTERN PKWY	Local Residential Street
EASTVIEW CT	EASTVIEW CT	Local Residential Street
EGE AVE	EGE AVE	Local Residential Street
EGE AVE	EGE AVE	Local Residential Street
EGE AVE	EGE AVE	Local Residential Street
ELIZABETH ST	ELIZABETH ST	Local Residential Street
ELM ST	ELM ST	Local Residential Street
EMERSON AVE	EMERSON AVE	Local Residential Street
EMORY ST	EMORY ST	Local Residential Street
ENOS PL	ENOS PL	Local Residential Street
	ENTERPRISE CT	Local Residential Street
HUDSON COUNTY 633	ERIE ST (CR 633)	Local Residential Street
HUDSON COUNTY 633	ERIE ST (CR 633)	Local Residential Street
HUDSON COUNTY 633	ERIE ST (CR 633)	Local Residential Street
ESSEX ST	ESSEX ST	Local Residential Street

NJDOT Name	LOCAL Name	Functional Class
ESSEX ST	ESSEX ST	Local Residential Street
EVERETT ST	EVERETT ST	Local Residential Street
EXETER RD	EXETER RD	Local Residential Street
FACTORY ST	FACTORY ST	Local Residential Street
FAIRMOUNT AVE	FAIRMOUNT AVE	Local Residential Street
FAIRMOUNT AVE	FAIRMOUNT AVE	Local Residential Street
FAIRMOUNT TER	FAIRMOUNT TER	Local Residential Street
FAIRVIEW AVE	FAIRVIEW AVE	Local Residential Street
FERNCLIFF RD	FERNCLIFF RD	Local Residential Street
FERRY ST	FERRY ST	Local Residential Street
HUDSON COUNTY 660	FERRY ST (CR 660)	Local Residential Street
FIFTH ST	FIFTH ST	Local Residential Street
FIFTH ST	FIFTH ST	Local Residential Street
	FIR ST	Local Residential Street
FIRST ST	FIRST ST	Local Residential Street
MERSELES ST	FIRST ST	Local Residential Street
FIRST ST	FIRST ST	Local Residential Street
HUDSON COUNTY 627	FIRST ST (CR 627)	Local Residential Street
HUDSON COUNTY 727	FIRST ST (CR 727)	Local Residential Street
FISK ST	FISK ST	Local Residential Street
FLEET ST	FLEET ST	Local Residential Street
FLORENCE ST	FLORENCE ST	Local Residential Street
FLORENCE ST	FLORENCE ST	Local Residential Street
FLOYD ST	FLOYD ST	Local Residential Street
FOREST ST	FOREST ST	Local Residential Street
FORREST ST	FORREST ST	Local Residential Street
HUDSON COUNTY 628	FOURTH ST (CR 628)	Local Residential Street
HUDSON COUNTY 628	FOURTH ST (CR 628)	Local Residential Street
FOWLER AVE	FOWLER AVE	Local Residential Street
FOX PL	FOX PL	Local Residential Street
	FOXHOUND CT	Local Residential Street
FR BROADWAY TO CO 622 EB	FR BROADWAY TO CO 622 EB	Local Residential Street
FR KELLOGG ST to NJ 440 NB	FR KELLOGG ST to NJ 440 NB	Local Residential Street
FR NJ 440 NB to 440 SB	FR NJ 440 NB to 440 SB	Local Residential Street
FR NJ 440 SB to KELLOGG ST	FR NJ 440 SB to KELLOGG ST	Local Residential Street
	FRANCES	Local Residential Street
FRANKLIN ST	FRANKLIN ST	Local Residential Street

NJDOT Name	LOCAL Name	Functional Class
HUDSON COUNTY 731	FRANKLIN ST (CR 731)	Local Residential Street
FREEDOM PL	FREEDOM PL	Local Residential Street
	FREEDOM WAY	Local Residential Street
FREEMAN AVE	FREEMAN AVE	Local Residential Street
FREEMAN AVE	FREEMAN AVE	Local Residential Street
FREMONT ST	FREMONT ST	Local Residential Street
FRONT ST	FRONT ST	Local Residential Street
FULTON AVE	FULTON AVE	Local Residential Street
HUDSON COUNTY 606	FULTON AVE (CR 606)	Local Residential Street
GARDNER AVE	GARDNER AVE	Local Residential Street
GARRISON AVE	GARRISON AVE	Local Residential Street
GARRISON AVE	GARRISON AVE	Local Residential Street
GARRISON AVE	GARRISON AVE	Local Residential Street
GATES AVE	GATES AVE	Local Residential Street
GATES AVE	GATES AVE	Local Residential Street
GAUTIER AVE	GAUTIER AVE	Local Residential Street
GIFFORD ST	GIFFORD ST	Local Residential Street
GILES AVE	GILES AVE	Local Residential Street
GILES AVE	GILES AVE	Local Residential Street
GLENN LA	GLENN LA	Local Residential Street
GLENN LA	GLENN LA	Local Residential Street
GRACE ST	GRACE ST	Local Residential Street
GRAHAM ST	GRAHAM ST	Local Residential Street
GRANT AVE	GRANT AVE	Local Residential Street
GRANT AVE	GRANT AVE	Local Residential Street
GRANT ST	GRANT ST	Local Residential Street
GRAY ST	GRAY ST	Local Residential Street
HUDSON COUNTY 710	GREENVILLE AVE (CR 710)	Local Residential Street
GREENVILLE AVE	GRENFIELD AVE	Local Residential Street
GRIECO DR	GRIECO DR	Local Residential Street
GRIFFITH ST	GRIFFITH ST	Local Residential Street
GRIFFITH ST	GRIFFITH ST	Local Residential Street
HAGUE ST	HAGUE ST	Local Residential Street
	HALF MOON ISLE	Local Residential Street
HALLADAY ST	HALLADAY ST	Local Residential Street
HALLADAY ST	HALLADAY ST	Local Residential Street
HALLADAY ST	HALLADAY ST	Local Residential Street
	HALLECK AVE	Local Residential Street

NJDOT Name	LOCAL Name	Functional Class
HALLECK AVE	HALLECK AVE	Local Residential Street
HUDSON COUNTY 667	HANCOCK AVE (CR 667)	Local Residential Street
HARMON ST	HARMON ST	Local Residential Street
HARRISON AVE	HARRISON AVE	Local Residential Street
HAWTHORNE AVE	HAWTHORNE AVE	Local Residential Street
	HEMLOCK ST	Local Residential Street
HENRY ST	HENRY ST	Local Residential Street
HERBERT PL	HERBERT PL	Local Residential Street
HIGH ST	HIGH ST	Local Residential Street
HIGHLAND AVE	HIGHLAND AVE	Local Residential Street
HIGHVIEW RD	HIGHVIEW RD	Local Residential Street
HILL ST	HILL ST	Local Residential Street
HOBSON ST	HOBSON ST	Local Residential Street
	HOLLY ST	Local Residential Street
HOLMES ST	HOLMES ST	Local Residential Street
HOMESTEAD PL	HOMESTEAD PL	Local Residential Street
HOPKINS AVE	HOPKINS AVE	Local Residential Street
HUDSON COUNTY 716	HOWARD PL (CR 716)	Local Residential Street
HOWELL ST	HOWELL ST	Local Residential Street
	HUDSON CT	Local Residential Street
	HUDSON CT	Local Residential Street
HUDSON ST	HUDSON ST	Local Residential Street
HUDSON ST	HUDSON ST	Local Residential Street
HURON AVE	HURON AVE	Local Residential Street
HUTTON ST	HUTTON ST	Local Residential Street
HUTTON ST	HUTTON ST	Local Residential Street
HUTTON ST	HUTTON ST	Local Residential Street
HUTTON ST	HUTTON ST	Local Residential Street
HUTTON ST	HUTTON ST	Local Residential Street
IORIO ST	IORIO ST	Local Residential Street
	IRENE CARSON CT	Local Residential Street
IRVING ST	IRVING ST	Local Residential Street
IVY PL	IVY PL	Local Residential Street
JACKSON AVE	JACKSON AVE	Local Residential Street
JACKSON AVE	JACKSON AVE	Local Residential Street
	JAMES AVE	Local Residential Street
JAMES AVE	JAMES AVE	Local Residential Street
JEFFERSON AVE	JEFFERSON AVE	Local Residential Street
JEFFERSON AVE	JEFFERSON AVE	Local Residential Street

NJDOT Name	LOCAL Name	Functional Class
JERSEY AVE	JERSEY AVE	Local Residential Street
JEWETT AVE	JEWETT AVE	Local Residential Street
HUDSON COUNTY 614	JOHNSTON AVE (CR 614)	Local Residential Street
JONES PL	JONES PL	Local Residential Street
JONES ST	JONES ST	Local Residential Street
JORDAN AVE	JORDAN AVE	Local Residential Street
	JOURNAL SQUARE	Local Residential Street
	JUNIPER ST	Local Residential Street
KEARNEY AVE	KEARNEY AVE	Local Residential Street
KEARNEY AVE	KEARNEY AVE	Local Residential Street
KELLOGG ST	KELLOGG ST	Local Residential Street
KENSINGTON AVE	KENSINGTON AVE	Local Residential Street
KENSINGTON AVE	KENSINGTON AVE	Local Residential Street
	KISSAM CT	Local Residential Street
LAFAYETTE ST	LAFAYETTE ST	Local Residential Street
	LAFAYETTE ST	Local Residential Street
LAIDLAW AVE	LAIDLAW AVE	Local Residential Street
LAIDLAW AVE	LAIDLAW AVE	Local Residential Street
HUDSON COUNTY 648	LAIDLAW AVE (CR 648)	Local Residential Street
LAKE ST	LAKE ST	Local Residential Street
HUDSON COUNTY 650	LAKE ST (CR) 650)	Local Residential Street
LARCH AVE	LARCH AVE	Local Residential Street
LAUREL CT	LAUREL CT	Local Residential Street
	LEE CT	Local Residential Street
LEMBECK AVE	LEMBECK AVE	Local Residential Street
HUDSON COUNTY 668	LEONARD ST (CR 668)	Local Residential Street
HUDSON COUNTY 668	LEONARD ST (CR 668)	Local Residential Street
LEWIS AVE	LEWIS AVE	Local Residential Street
LEXINGTON AVE	LEXINGTON AVE	Local Residential Street
LIBERTY AVE	LIBERTY AVE	Local Residential Street
LIBERTY AVE	LIBERTY AVE	Local Residential Street
LIBERTY AVE	LIBERTY AVE	Local Residential Street
HUDSON COUNTY 647	LIBERTY AVE (CR 647)	Local Residential Street
HUDSON COUNTY 647	LIBERTY AVE (CR 647)	Local Residential Street
LIENAU PL	LIENAU PL	Local Residential Street

NJDOT Name	LOCAL Name	Functional Class
LINCOLN ST	LINCOLN ST	Local Residential Street
LINCOLN ST	LINCOLN ST	Local Residential Street
LINDEN AVE	LINDEN AVE	Local Residential Street
HUDSON COUNTY 711	LINDEN AVE (CR 711)	Local Residential Street
LINDEN CT	LINDEN CT	Local Residential Street
	LOCUST ST	Local Residential Street
LOGAN AVE	LOGAN AVE	Local Residential Street
LONG ST	LONG ST	Local Residential Street
LUDLOW ST	LUDLOW ST	Local Residential Street
	LYON CT	Local Residential Street
	LYON CT	Local Residential Street
MAGNOLIA AVE	MAGNOLIA AVE	Local Residential Street
MAGNOLIA AVE	MAGNOLIA AVE	Local Residential Street
MAGNOLIA AVE	MAGNOLIA AVE	Local Residential Street
MAIDEN LA	MAIDEN LA	Local Residential Street
	MALL DR E	Local Residential Street
	MALL DR W	Local Residential Street
HUDSON COUNTY 611	MALLORY AVE (CR 611)	Local Residential Street
HUDSON COUNTY 611	MALLORY AVE (CR 611)	Local Residential Street
MANHATTAN AVE	MANHATTAN AVE	Local Residential Street
MANHATTAN AVE	MANHATTAN AVE	Local Residential Street
MANNING AVE	MANNING AVE	Local Residential Street
MANNING AVE	MANNING AVE	Local Residential Street
	MANNING AVE	Local Residential Street
HUDSON COUNTY 722	MAPLE ST (CR 722)	Local Residential Street
HUDSON COUNTY 722	MAPLE ST (CR 722)	Local Residential Street
MARCY AVE	MARCY AVE	Local Residential Street
MARIN BLVD	MARIN BLVD	Local Residential Street
MARION PL	MARION PL	Local Residential Street
MARSHALL ST	MARSHALL ST	Local Residential Street
MAXWELL ST	MAXWELL ST	Local Residential Street
	MC MARTIN CT	Local Residential Street
MCADOO AVE	MCADOO AVE	Local Residential Street
MCDOUGALL ST	MCDOUGALL ST	Local Residential Street
MCPHERSON PL	MCPHERSON PL	Local Residential Street
HUDSON COUNTY 730	McWILLIAMS PL (CR 730)	Local Residential Street
MERCER ST	MERCER ST	Local Residential Street

NJDOT Name	LOCAL Name	Functional Class
MERCER ST	MERCER ST	Local Residential Street
MERCER ST	MERCER ST	Local Residential Street
MERCER ST	MERCER ST	Local Residential Street
MERITT ST	MERITT ST	Local Residential Street
MILL ST	MILL RD	Local Residential Street
MILL ST	MILL ST	Local Residential Street
MILLER ST	MILLER ST	Local Residential Street
MILTON AVE	MILTON AVE	Local Residential Street
MINA DR	MINA DR	Local Residential Street
MINERVA ST	MINERVA ST	Local Residential Street
MONITOR ST	MONITOR ST	Local Residential Street
MONMOUTH ST	MONMOUTH ST	Local Residential Street
MONMOUTH ST	MONMOUTH ST	Local Residential Street
MONMOUTH ST	MONMOUTH ST	Local Residential Street
HUDSON COUNTY 661	MONTROSE AVE (CR 661)	Local Residential Street
MORGAN ST	MORGAN ST	Local Residential Street
HUDSON COUNTY 726	MORGAN ST (CR 726)	Local Residential Street
HUDSON COUNTY 726	MORGAN ST (CR 726)	Local Residential Street
MORRIS ST	MORRIS ST	Local Residential Street
MORTON PL	MORTON PL	Local Residential Street
MORTON ST	MORTON ST	Local Residential Street
MOTORANO WAY	MOTORANO WAY	Local Residential Street
MSGR. WOJTYCHA DR	MSGR. WOJTYCHA DR	Local Residential Street
	MULBERRY ST	Local Residential Street
MURYLU ST	MURYLU ST	Local Residential Street
MYRTLE AVE	MYRTLE AVE	Local Residential Street
MYRTLE AVE	MYRTLE AVE	Local Residential Street
HUDSON COUNTY 689	NELSON AVE (CR 689)	Local Residential Street
NEPTUNE AVE	NEPTUNE AVE	Local Residential Street
NEPTUNE AVE	NEPTUNE AVE	Local Residential Street
NESBITT ST	NESBITT ST	Local Residential Street
NEVIN ST	NEVIN ST	Local Residential Street
NEW ST	NEW ST	Local Residential Street
NEWKIRK AVE	NEWKIRK AVE	Local Residential Street
NEWKIRK ST	NEWKIRK ST	Local Residential Street
	NEWPORT PKWY	Local Residential Street
NNP	NNP	Local Residential Street

NJDOT Name	LOCAL Name	Functional Class
NNP	NNP	Local Residential Street
NNP	NNP	Local Residential Street
NNP	NNP	Local Residential Street
NNP	NNP	Local Residential Street
NNP	NNP	Local Residential Street
NNP	NNP	Local Residential Street
NNP	NNP	Local Residential Street
NNP	NNP	Local Residential Street
NNP	NNP	Local Residential Street
NNP	NNP	Local Residential Street
NNP	NNP	Local Residential Street
NNP	NNP	Local Residential Street
NNP	NNP	Local Residential Street
NNP	NNP	Local Residential Street
NORCROFT RD	NORCROFT RD	Local Residential Street
NORTH ST	NORTH ST	Local Residential Street
NORTH ST	NORTH ST	Local Residential Street
NORTH ST	NORTH ST	Local Residential Street
NUNDA AVE	NUNDA AVE	Local Residential Street
NUNDA AVE	NUNDA AVE	Local Residential Street
OAK ST	OAK ST	Local Residential Street
OAKDALE RD	OAKDALE RD	Local Residential Street
OAKLAND AVE	OAKLAND AVE	Local Residential Street
HUDSON COUNTY 644	OAKLAND AVE (CR 644)	Local Residential Street
OBSERVER HYW	OBSERVER HWY	Local Residential Street
OGDEN AVE	OGDEN AVE	Local Residential Street
OGDEN AVE	OGDEN AVE	Local Residential Street
OLEAN AVE	OLEAN AVE	Local Residential Street
OLEAN AVE	OLEAN AVE	Local Residential Street
ORCHARD ST	ORCHARD ST	Local Residential Street
ORIENT AVE	ORIENT AVE	Local Residential Street
OXFORD AVE	OXFORD AVE	Local Residential Street
PAMRAPO ST	PAMRAPO ST	Local Residential Street
HUDSON COUNTY 715	PARK ST (CR 715)	Local Residential Street
PARNELL PL	PARNELL PL	Local Residential Street
PASSAIC AVE	PASSAIC AVE	Local Residential Street
PATERSON ST	PATERSON ST	Local Residential Street
	PAULSEN CT	Local Residential Street
PAVONIA AVE	PAVONIA AVE	Local Residential Street
PAVONIA AVE	PAVONIA AVE	Local Residential Street

NJDOT Name	LOCAL Name	Functional Class
PAVONIA AVE	PAVONIA AVE	Local Residential Street
HUDSON COUNTY 632 I	PAVONIA AVE (CR 632 I)	Local Residential Street
HUDSON COUNTY 632 II	PAVONIA AVE (CR 632 II)	Local Residential Street
HUDSON COUNTY 640	PAVONIA AVE (CR 640)	Local Residential Street
PERRINE AVE	PERRINE AVE	Local Residential Street
PERRY ST	PERRY ST	Local Residential Street
PERSHING PLAZA	PERSHING PLAZA	Local Residential Street
	PERSIMMON CT	Local Residential Street
PIERCE AVE	PIERCE AVE	Local Residential Street
PINE ST	PINE ST	Local Residential Street
PINE ST	PINE ST	Local Residential Street
PINE ST	PINE ST	Local Residential Street
PINECREST RD	PINECREST RD	Local Residential Street
PLAINFIELD AVE	PLAINFIELD AVE	Local Residential Street
POLLOCK ST	POLLOCK ST	Local Residential Street
HUDSON COUNTY 666	POPLAR ST (CR 666)	Local Residential Street
PRESCOTT ST	PRESCOTT ST	Local Residential Street
PRINCETON AVE	PRINCETON AVE	Local Residential Street
PRINCETON AVE	PRINCETON AVE	Local Residential Street
PRINCETON AVE	PRINCETON AVE	Local Residential Street
PRIOR ST	PRIOR ST	Local Residential Street
HUDSON COUNTY 654	PROSPECT ST (CR 654)	Local Residential Street
PROVOST ST	PROVOST ST	Local Residential Street
PULASKI LA E.	PULASKI LA E.	Local Residential Street
PULASKI ST	PULASKI ST	Local Residential Street
RANDOLPH AVE	RANDOLPH AVE	Local Residential Street
RAVINE AVE	RAVINE AVE	Local Residential Street
HUDSON COUNTY 662	RAVINE AVE (CR 662)	Local Residential Street
	REDWOOD ST	Local Residential Street
REED ST	REED ST	Local Residential Street
RESERVE AVE	RESERVE AVE	Local Residential Street
HUDSON COUNTY 656	RESERVOIR AVE (CR 656)	Local Residential Street
RICHARD ST	RICHARD ST	Local Residential Street
RISTAINO DR	RISTAINO DR	Local Residential Street
	RIVER DR S	Local Residential Street
RIVERVIEW RD	RIVERVIEW RD	Local Residential Street

NJDOT Name	LOCAL Name	Functional Class
ROCK ST	ROCK ST	Local Residential Street
ROMAINE AVE	ROMAINE AVE	Local Residential Street
ROMAINE AVE	ROMAINE AVE	Local Residential Street
ROMAINE AVE	ROMAINE AVE	Local Residential Street
HUDSON COUNTY 603	ROMAR AVE (CR 603)	Local Residential Street
ROOSEVELT AVE	ROOSEVELT AVE	Local Residential Street
ROOSEVELT AVE	ROOSEVELT AVE	Local Residential Street
	ROOSEVELT CT	Local Residential Street
ROSE AVE	ROSE AVE	Local Residential Street
HUDSON COUNTY 712	ROSE AVE (CR 712)	Local Residential Street
ROSE ST	ROSE ST	Local Residential Street
ROSE ST	ROSE ST	Local Residential Street
	RUBY CT	Local Residential Street
RUTGERS AVE	RUTGERS AVE	Local Residential Street
SACKETT ST	SACKETT ST	Local Residential Street
SADDLEWOOD CT	SADDLEWOOD CT	Local Residential Street
SANFORD PL	SANFORD PL	Local Residential Street
HUDSON COUNTY 661	SANFORD PL (CR 661)	Local Residential Street
SCOTT ST	SCOTT ST	Local Residential Street
SEAMAN AVE	SEAMAN AVE	Local Residential Street
SEAVIEW AVE	SEAVIEW AVE	Local Residential Street
HUDSON COUNTY 603	SEAVIEW AVE (CR 603)	Local Residential Street
HUDSON COUNTY 678	SECAUCUS RD (CR 678)	Local Residential Street
SECOND ST	SECOND ST	Local Residential Street
SECOND ST	SECOND ST	Local Residential Street
SECOND ST	SECOND ST	Local Residential Street
SEIDLER ST	SEIDLER ST	Local Residential Street
DEY ST	SENATE PL	Local Residential Street
SEVENTH ST	SEVENTH ST	Local Residential Street
SEVENTH ST	SEVENTH ST	Local Residential Street
	SHEARWATER CT E	Local Residential Street
	SHEARWATER CT W	Local Residential Street
SHEFFIELD ST	SHEFFIELD ST	Local Residential Street
SHERMAN AVE	SHERMAN AVE	Local Residential Street
SHERMAN PL	SHERMAN PL	Local Residential Street
SHERMAN PL	SHERMAN PL	Local Residential Street
SHERMAN PL	SHERMAN PL	Local Residential Street

NJDOT Name	LOCAL Name	Functional Class
SKILLMAN AVE	SKILLMAN AVE	Local Residential Street
SKYLINE DR	SKYLINE DR	Local Residential Street
	SMIT CT	Local Residential Street
	SMIT CT	Local Residential Street
SMITH ST	SMITH ST	Local Residential Street
FR CO 602 to SOCIETY HILL APTS	SOCIETY HILL DR N	Local Residential Street
SOUTH ST	SOUTH ST	Local Residential Street
SOUTH ST	SOUTH ST	Local Residential Street
SPRING ST	SPRING ST	Local Residential Street
SPRUCE ST	SPRUCE ST	Local Residential Street
HUDSON COUNTY 646	ST PAULS AVE (CR 646)	Local Residential Street
ST. PAULS AVE	ST. PAULS AVE	Local Residential Street
	STADIUM CT	Local Residential Street
	STADIUM PLAZA	Local Residential Street
STAGG ST	STAGG ST	Local Residential Street
STATE ST	STATE ST	Local Residential Street
STEGMAN CT	STEGMAN CT	Local Residential Street
STEGMAN PKWY	STEGMAN PKWY	Local Residential Street
STEGMAN PL	STEGMAN PL	Local Residential Street
STEGMAN ST	STEGMAN ST	Local Residential Street
STEGMAN ST	STEGMAN ST	Local Residential Street
STEGMAN ST	STEGMAN ST	Local Residential Street
STEGMAN TER	STEGMAN TER	Local Residential Street
STERLING AVE	STERLING AVE	Local Residential Street
STERLING AVE	STERLING AVE	Local Residential Street
STEUBEN ST	STEUBEN ST	Local Residential Street
STEVENS AVE	STEVENS AVE	Local Residential Street
STEVENS AVE	STEVENS AVE	Local Residential Street
HUDSON COUNTY 623	STORMS AVE (CR 623)	Local Residential Street
STUYVESANT AVE	STUYVESANT AVE	Local Residential Street
SUBURBIA CT	SUBURBIA CT	Local Residential Street
SUBURBIA CT	SUBURBIA CT	Local Residential Street
SUBURBIA TER	SUBURBIA TER	Local Residential Street
SUBURBIA TER	SUBURBIA TER	Local Residential Street
HUDSON COUNTY 709	SULLIVAN DR (CR 709)	Local Residential Street
	SURREY CT	Local Residential Street
SUSSEX ST	SUSSEX ST	Local Residential Street

NJDOT Name	LOCAL Name	Functional Class
SUSSEX ST	SUSSEX ST	Local Residential Street
HUDSON COUNTY 686	SUSSEX ST (CR 686)	Local Residential Street
SUYDAM AVE	SUYDAM AVE	Local Residential Street
SUYDAM AVE	SUYDAM AVE	Local Residential Street
	SWAN CT	Local Residential Street
SYCAMORE RD	SYCAMORE RD	Local Residential Street
	TELLICHERRY CT	Local Residential Street
TERHUNE AVE	TERHUNE AVE	Local Residential Street
HUDSON COUNTY 649	TERRACE AVE (CR 649)	Local Residential Street
HUDSON COUNTY 626	THIRD ST (CR 626)	Local Residential Street
HUDSON COUNTY 626	THIRD ST (CR 626)	Local Residential Street
THORNE ST	THORNE ST	Local Residential Street
THORNE ST	THORNE ST	Local Residential Street
THORNE ST	THORNE ST	Local Residential Street
	TOTTENHAM CT	Local Residential Street
TOWERS ST	TOWERS ST	Local Residential Street
TRENTON ST	TRENTON ST	Local Residential Street
HUDSON COUNTY 650	TROY ST (CR 650)	Local Residential Street
TUERS AVE	TUERS AVE	Local Residential Street
TUERS AVE	TUERS AVE	Local Residential Street
UNION ST	UNION ST	Local Residential Street
UNION ST	UNION ST	Local Residential Street
HUDSON COUNTY 610	UNION ST (CR 610)	Local Residential Street
VAN CLEEF ST	VAN CLEEF ST	Local Residential Street
VAN CLEEF ST	VAN CLEEF ST	Local Residential Street
VAN HORNE ST	VAN HORNE ST	Local Residential Street
VAN HORNE ST	VAN HORNE ST	Local Residential Street
VAN HORNE ST	VAN HORNE ST	Local Residential Street
HUDSON COUNTY 714	VAN HOUSTEN PKWY (CR 714)	Local Residential Street
VAN NOSTRAND AVE	VAN NOSTRAND AVE	Local Residential Street
VAN NOSTRAND AVE	VAN NOSTRAND AVE	Local Residential Street
VAN NOSTRAND AVE	VAN NOSTRAND AVE	Local Residential Street
VAN REIPEN AVE	VAN REIPEN AVE	Local Residential Street
VAN REIPEN AVE	VAN REIPEN AVE	Local Residential Street
VAN REYPEN ST	VAN REYPEN ST	Local Residential Street
VAN REYPEN ST	VAN REYPEN ST	Local Residential Street
VAN VORST ST	VAN VORST ST	Local Residential Street
HUDSON COUNTY 725	VAN VORST ST (CR	Local Residential Street

NJDOT Name	LOCAL Name	Functional Class
	725)	
VAN WAGONEN AVE	VAN WAGONEN AVE	Local Residential Street
VAN WAGONEN AVE	VAN WAGONEN AVE	Local Residential Street
VAN WAGONEN AVE	VAN WAGONEN AVE	Local Residential Street
VAN WAGONEN AVE	VAN WAGONEN AVE	Local Residential Street
VAN WINKLE AVE	VAN WINKLE AVE	Local Residential Street
VAN WINKLE AVE	VAN WINKLE AVE	Local Residential Street
VAN WINKLE AVE	VAN WINKLE AVE	Local Residential Street
COLES ST	VARICK ST	Local Residential Street
COLES ST	VARICK ST	Local Residential Street
COLES ST	VARICK ST	Local Residential Street
VINE ST	VINE ST	Local Residential Street
VIRGINIA AVE	VIRGINIA AVE	Local Residential Street
VIRGINIA AVE	VIRGINIA AVE	Local Residential Street
VIRGINIA AVE	VIRGINIA AVE	Local Residential Street
VIRGINIA TER	VIRGINIA TER	Local Residential Street
VREELAND PL	VREELAND PL	Local Residential Street
VREELAND TER	VREELAND TER	Local Residential Street
VROOM ST	VROOM ST	Local Residential Street
VROOM ST	VROOM ST	Local Residential Street
HUDSON COUNTY 729	W HAMILTON PL (CR 729)	Local Residential Street
	W ROBINSON DR	Local Residential Street
WADE ST	WADE ST	Local Residential Street
WALDO AVE	WALDO AVE	Local Residential Street
WALDO AVE	WALDO AVE	Local Residential Street
WALES AVE	WALES AVE	Local Residential Street
WALLER ST	WALLER ST	Local Residential Street
WALLIS AVE	WALLIS AVE	Local Residential Street
	WALNUT ST	Local Residential Street
WARNER AVE	WARNER AVE	Local Residential Street
WARREN ST	WARREN ST	Local Residential Street
HUDSON COUNTY 688	WARREN ST (CR 688)	Local Residential Street
HUDSON COUNTY 688	WARREN ST (CR 688)	Local Residential Street
WASHBURN ST	WASHBURN ST	Local Residential Street
WASHBURN ST	WASHBURN ST	Local Residential Street
WATER ST	WATER ST	Local Residential Street
WAVERLY AVE	WAVERLY AVE	Local Residential Street
WAYNE ST	WAYNE ST	Local Residential Street
WAYNE ST	WAYNE ST	Local Residential Street

NJDOT Name	LOCAL Name	Functional Class
HUDSON COUNTY 616 I	WAYNE ST (CR 616 I)	Local Residential Street
HUDSON COUNTY 616 II	WAYNE ST (CR 616 II)	Local Residential Street
HUDSON COUNTY 616 III	WAYNE ST (CR 616 III)	Local Residential Street
HUDSON COUNTY 669	WEBSTER AVE (CR 669)	Local Residential Street
WEGMAN CT	WEGMAN CT	Local Residential Street
WEGMAN PKWY	WEGMAN PKWY	Local Residential Street
WEGMAN PKWY	WEGMAN PKWY	Local Residential Street
WEGMAN PKWY	WEGMAN PKWY	Local Residential Street
WELDON ST	WELDON ST	Local Residential Street
WELSH LN	WELSH LN	Local Residential Street
WEST SIDE AVE	WEST SIDE AVE	Local Residential Street
WEST ST	WEST ST	Local Residential Street
WESTERN AVE	WESTERN AVE	Local Residential Street
WESTERVELT AVE	WESTERVELT AVE	Local Residential Street
	WESTMINSTER LN	Local Residential Street
WESTVIEW CT	WESTVIEW CT	Local Residential Street
WHITMAN AVE	WHITMAN AVE	Local Residential Street
WHITON ST	WHITON ST	Local Residential Street
WHITON ST	WHITON ST	Local Residential Street
WHITON ST	WHITON ST	Local Residential Street
WHITON ST	WHITON ST	Local Residential Street
WILKINSON AVE	WILKINSON AVE	Local Residential Street
WILKINSON AVE	WILKINSON AVE	Local Residential Street
WILLIAMS AVE	WILLIAMS AVE	Local Residential Street
	WILLOW ST	Local Residential Street
WINFIELD AVE	WINFIELD AVE	Local Residential Street
WINFIELD AVE	WINFIELD AVE	Local Residential Street
WINFIELD AVE	WINFIELD AVE	Local Residential Street
WOOD PL	WOOD PL	Local Residential Street
WOODLAND AVE	WOODLAND AVE	Local Residential Street
HUDSON COUNTY 604	WOODLAWN AVE (CR 604)	Local Residential Street
HUDSON COUNTY 604	WOODLAWN AVE (CR 604)	Local Residential Street
WOODWARD ST	WOODWARD ST	Local Residential Street
WOODWARD ST	WOODWARD ST	Local Residential Street
WOODWARD ST	WOODWARD ST	Local Residential Street
WRIGHT AVE	WRIGHT AVE	Local Residential Street
	XAVIER CT	Local Residential Street

NJDOT Name	LOCAL Name	Functional Class
YALE AVE	YALE AVE	Local Residential Street
YORK ST	YORK ST	Local Residential Street
HUDSON COUNTY 618	YORK ST (CR 618)	Local Residential Street
HUDSON COUNTY 652	ZABRISKIE ST (CR 652)	Local Residential Street
HUDSON COUNTY 652	ZABRISKIE ST (CR 652)	Local Residential Street

Appendix

Jersey City Classification System
Local Park Roads

Jersey City Classification System
Local Park Roads

NJDOT Name	Local Name	Functional Classification
AUDREY ZAPP DRIVE	AUDREY ZAPP DRIVE	Local Park Road
	FREEDOM WAY	Local Park Road
MORRIS PESIN RD	MORRIS PESIN RD	Local Park Road
LINCOLN PARK		Local Park Road
LINCOLN PARK		Local Park Road
LINCOLN PARK		Local Park Road
LINCOLN PARK		Local Park Road
LINCOLN PARK		Local Park Road
LINCOLN PARK		Local Park Road
LINCOLN PARK		Local Park Road
LINCOLN PARK		Local Park Road
LINCOLN PARK		Local Park Road

Appendix

FHWA Classification System

FHWA Classification System

NJDOT Name	Local Name	Functional Classification
US 1	US 1	Urban Freeway/Expressway
US 1 SECONDARY	US 1 SECONDARY	Urban Freeway/Expressway
I-78	I-78	Urban Interstate
I-78	I-78	Urban Interstate
I-78 SECONDARY	I-78 SECONDARY	Urban Interstate
FR NJ 7 NB to US 1T WB	FR NJ 7 NB to US 1T WB	Urban Principal Arterial
FR RT 440 to US 1 TRUCK EB	FR RT 440 to US 1 TRUCK EB	Urban Principal Arterial
FR US 1 TRUCK WB to RT 440 SB	FR US 1 TRUCK WB to RT 440 SB	Urban Principal Arterial
I-78	I-78	Urban Principal Arterial
NJ 139 LOWER	NJ 139 LOWER	Urban Principal Arterial
NJ 139 LOWER SECONDARY	NJ 139 LOWER SECONDARY	Urban Principal Arterial
NJ 185	NJ 185	Urban Principal Arterial
NJ 185 SECONDARY	NJ 185 SECONDARY	Urban Principal Arterial
NJ 440	NJ 440	Urban Principal Arterial
NJ 440 SECONDARY	NJ 440 SECONDARY	Urban Principal Arterial
NJ 440 SECONDARY	NJ 440 SECONDARY	Urban Principal Arterial
NJ 7	NJ 7	Urban Principal Arterial
NJ 7 SECONDARY	NJ 7 SECONDARY	Urban Principal Arterial
US 1	US 1	Urban Principal Arterial
US 1 SECONDARY	US 1 SECONDARY	Urban Principal Arterial
US 1 TRUCK	US 1 TRUCK	Urban Principal Arterial
US 1 TRUCK SECONDARY	US 1 TRUCK SECONDARY	Urban Principal Arterial
US 1 TRUCK SECONDARY	US 1 TRUCK SECONDARY	Urban Principal Arterial